To: John McDonough

From: Michelle M. Alexander, Director of Community Development

Date: June 27, 2016 for Submission onto the July 19, 2016 City Council Work Session

Subject: Ordinance to Amend the Sandy Springs Post Development Stormwater Regulations

---

Department of Community Recommendation:
Allow Staff to proceed with obtaining public comment and preparing amendments to the city stormwater regulations to:

- Adopt the updated Georgia Stormwater Management Manual (as required by the State before Jan 1, 2017)
- Strengthen the updated manual by supplementing with city code standards and guidelines for:
  - Single Family Residential (SF-Res) new/replacement build
  - Single Family Residential additions
  - Small Commercial projects

Background:
The Atlanta Regional Commission and partners spent 2014-2015 updating the Georgia Stormwater Management Manual (the "Blue Book"), with stakeholders, technical teams and public input. The update includes the guidance and preference for green infrastructure methods that the City Council and Mayor directed Staff to achieve internally in the spring of 2015. **Staff came to Council in April** to review the improvements made to the manual and present recommendations for supplementing gaps in the manual related to single family residential and infill**. Council directed staff to explain the potential impact Staff's recommendation might have on new construction for individual single family** residential projects and additions.

Discussion:
Like the current Blue Book, the update exempts residential from providing certain water quality measures. Since much of Sandy Springs' subdivisions were built prior to the modern rules of stormwater management, many have no stormwater management systems at all. Expansion of building footprint and other impervious area has an accumulative effect on run-off, water quality and the health of our streams. Providing controls will help address these deficiencies. Staff recommends a threshold of 500 feet of disturbed acreage to trigger providing water quality measures. Our average home addition generates 904 square feet additional impervious and average pool generates 870. For comparison, the City of Atlanta several years ago established a trigger for SF-Res at 1,000 square feet of disturbed area. There exists extensive guidelines for helping homeowners; please see attached.

Similarly, the Blue Book does not address small commercial sites, for which the City of Atlanta also has established similar rules, triggered at 500 square feet. Example guidelines are also attached for this type of development.

Attachments:
Example Single Family Residential Guidelines – CoA
Example Small Commercial Guidelines - CoA

Stormwater Regulations Update

July 19, 2016

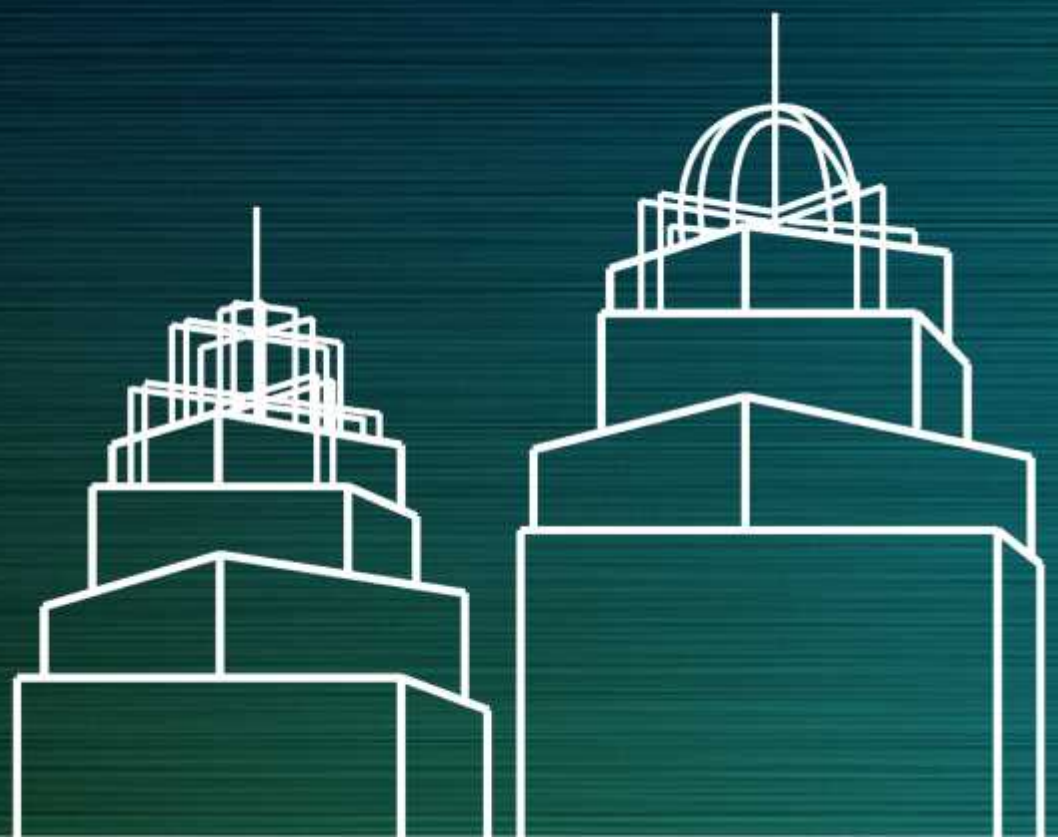

SANDY SPRINGS
GEORGIA

Background

- Discussion from the April 19th Mayor & City Council meeting:
  - Should we adopt the updated Georgia Stormwater Management Manual (Blue Book)?
  - Should we supplement the new Blue Book?
  - Council directive: Provide scenarios of impact on single family residential and trade-offs for additional requirements.

Background

- The Blue Book applies only to new development that includes the creation or addition of *5,000 square feet or greater* of new impervious surface area, & *recommends* that individual single family residential lots be exempted from the stormwater management standards
- **Single family stand-alone development** typically includes the demolition of a home and rebuild on the same lot
  - Original development typically occurred at a time when no stormwater management system was required
  - The current code has no maximum impervious coverage as a control
  - Additions need to add *5,000 square feet* to trigger the installation of a stormwater management
    - The average 2016 home addition is 904 square feet
    - The average 2016 pool addition is 870 square feet
- **Small non-residential development activity** often create or add less than 5,000 square feet of additional impervious surface and are thusly not required to manage stormwater on site

Problem – No Maximum Impervious Coverage

The existing Zoning Ordinance does not establish maximum lot or impervious surface coverage for single family residential

Solution

Update to the Zoning & Land Development Code will address impervious surface maximums; requires analysis and community discussion

Problem – Non-Residential Small Projects

- Due to the size of many small non-residential development activities, many are excluded from stormwater management requirements

Solution

- Establish stormwater management requirements for small, non-residential development activity which creates *between 500 and 5,000 square feet* of new impervious surface
- Establish preference for Green Infrastructure solutions (see CoA example)

Potential Impacts

- Similar cost implications for single family homeowners if comparable devices are used to manage stormwater
- Mitigate cumulative impact of numerous small projects

Problem – Single Family Residential

- Additions and pools increase the area of impervious surface
- Stormwater drainage has negative impacts to downstream neighbors
- Staff is in receipt of multiple complaints that pool additions cause changes in storm flow patterns and increase the stormwater volume compared to pre-construction conditions. Without baseline difficult to assess.

Solution # 1 (as presented in April)

- To reduce the trigger point of impervious additions to **500** square feet
- This trigger will capture most additions and pool additions
- The infiltration device would only be sized for the amount of new impervious

Solutions

	Blue Book	**Solution #1**	**Solution #2 (Example, CoA)**
Threshold	5,000 square feet	500 square feet	1,000 square feet
Retention Requirement	Retain 1 inch if possible, otherwise water quality required for 1.2 inches	1.2 inches	1 inch

Impacts of Proposed Solution

- At plan review the design professional must provide an infiltration method for the first 1.2” of rainfall off the new impervious surface.
- This example indicates one flow well device with 2 feet of 57 stone depth and 3 feet of 57 stone width at each side will hold the capacity required for the pool addition.
- The Blue Book estimates that the cost for a dry well would range between **$1,350** and **$1,700**

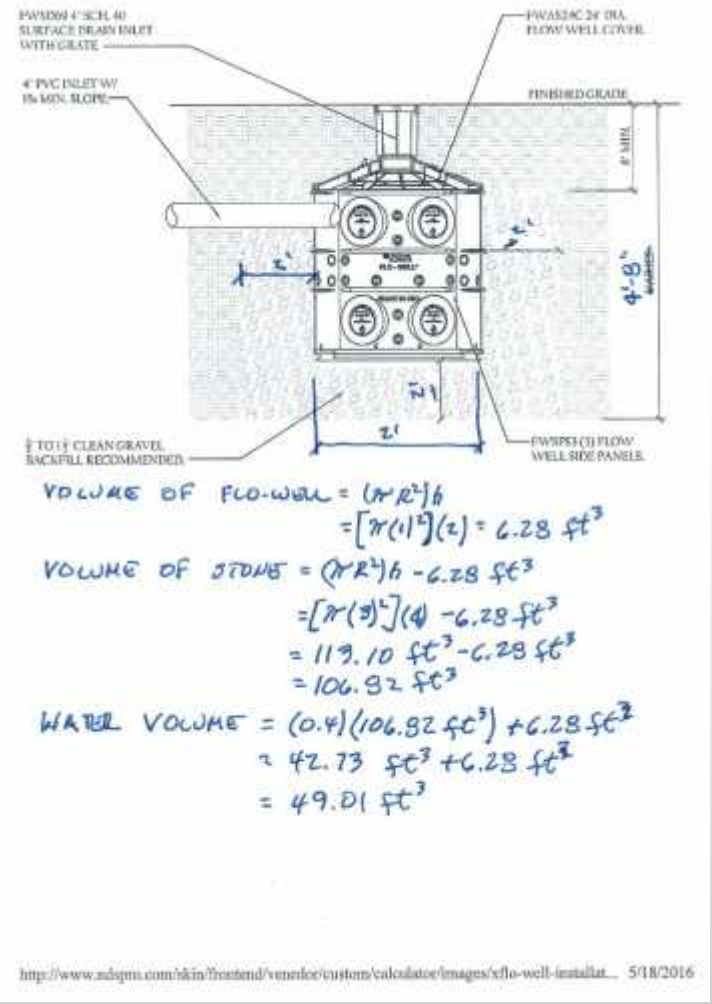

Installation Examples

Impacts of Proposed Solution

- Dedicated land area required for flow well & drainage
- May require tree removal
- Using plantings and other non-structural techniques requires even more site capacity
- Example: New single family home being constructed on a half-acre lot, with 60% impervious coverage (13,068 square feet). The following are some techniques that could be utilized to manage the stormwater retention requirement of 1.2 inches:
  - *Technique 1*: Flo-wells surrounded with 2 feet of stone on sides and below. 27 Flo-wells would be required, consuming **763** square feet of lot surface area.
  - *Technique 2*: Infiltration trench pit with no pipe, two Flo-wells, and seven feet of stone depth. A 21.5' by 21.5' square would be required, consuming **463** square feet of lot surface area.
  - *Technique 3*: Infiltration trench with 48" perforated pipe and two Flo-wells. Trench area would consume **322** square feet of lot surface area.

Limits to trees serving as green infrastructure

- Plantings and trees do not yield a one-to-one ratio to stormwater devices
  - The forested area needed to match the capacity of a device would likely be larger than many of our lots
  - Engineering constraints (ie: soil types, slope, etc.) limit the number of sites for which green infrastructure solutions would be applicable
  - Average lot size by zoning district:

District	Number of parcels	Average lot size
R-1	800	2.86 acres
R-2	2240	1.65 acres
R-2A	2220	0.84 acres
R-3/R-3A	6228	0.58 acres
R-4/R-4A	985	0.44 acres
R-5/R-5A	351	0.23 acres
R-6	18	0.68 acres

Discussion

- Can staff proceed with adoption of the new Blue Book?
- Should staff supplement the Blue Book with single family residential standards as proposed (500 sf threshold) or follow the City of Atlanta's regulations (1,000 sf threshold)?
- Should staff supplement the Blue Book with small non-residential development activity standards as proposed (500 sf threshold)?

Green Infrastructure for Single Family Residences

CITY OF ATLANTA STORMWATER GUIDELINES

Prepared for

CITY OF ATLANTA, GEORGIA

DEPARTMENT OF WATERSHED MANAGEMENT

NOVEMBER 2012

Prepared by

AMEC Environment & Infrastructure

THIS PAGE INTENTIONALLY LEFT BLANK

INTRODUCTION

Background and Purpose

Land development permanently alters the way in which stormwater flows across a site due to grading, compaction, and the installation of impervious cover. In order to mitigate these impacts, the City of Atlanta requires, in accordance with *Chapter 74, Article X. Post Development Stormwater Management*, that stormwater management measures be utilized when constructing a new home or an addition that is greater than 1,000 square feet of impervious surface.

The purpose of this document is to provide a guideline for selecting and installing the appropriate stormwater management measures when constructing a home.

This guideline employs simplified design standards more applicable to the homeowner/builder experience, thus avoiding the necessity for complex engineering calculations and analysis. This guideline is meant to complement the use of the Georgia Stormwater Management Manual (Blue Book) and the Coastal Stormwater Supplement (CSS). Those documents may be used for design purposes as appropriate in lieu of this document, but must be used for sites that propose more than 5,000 square feet of impervious area.

Submittal Information

The following section provides, in a question and answer format, the necessary information for understanding the requirements and process for submittal.

What types of Single Family Residential (SFR) projects require Stormwater Management?

The following activities are required to install stormwater management on site:

- The construction of a new or infill house; or
- Additions that involve the creation, or demolition and replacement of more than 1,000 ft^2 of impervious cover.

What portions of SFR projects require Stormwater Management?

These requirements are intended to capture the main portions of SFR impervious areas.

Impervious cover is defined as *a surface composed of any material that significantly impedes or prevents the natural percolation of water into soil, which includes, but is not limited to, rooftops, buildings, streets and roads, and any concrete or asphalt surface.* Only the major impervious areas of the property need to be treated. This includes the rooftop of the main structure and garage, parking areas and paved patio areas. It excludes minor out buildings, walkways, small miscellaneous paved areas, and the entry driveway area leading from the road to parking and turn around areas.

The area draining to any practice is called the "contributing drainage area" and normally consists of 100% impervious area, though for rain gardens and filter strips incidental small pervious areas can be included if unavoidable, and the areas are stabilized to eliminate soil erosion.

What are the principles for managing stormwater on SFR developments?

Residential developments are not required to provide the same types of stormwater management as commercial projects; however, certain requirements must be met to ensure that stormwater runoff does not overwhelm stormwater infrastructure; impact water quality in our streams; or impact adjacent property. The key principles for managing stormwater from a SFR lot are:

- Proper grading techniques and Erosion Control BMPs during construction;
- Runoff Reduction (see section below);
- Reliance on infiltration only where the water table or bedrock layer is at least two feet below the bottom of the practice in use; and,
- Proper installation and maintenance of downspouts, channels, or any other sources of concentrated flow.

What is Runoff Reduction?

The term 'Runoff Reduction' means the interception, evapotranspiration, infiltration or capture and reuse of stormwater runoff. Examples of runoff reduction techniques on a single family residential development include any appropriate combination of the following techniques termed Green Infrastructure Practices:

1. installing a rain garden or bioretention area,
2. replacing traditionally impervious surfaces (driveways, patios, etc.) with pervious paving,
3. routing downspouts to underground dry wells,
4. routing downspouts to modified French drains,
5. using cisterns for reuse or irrigation, or
6. directing sheet flow to adequately sized vegetated filter strips, or any appropriate combination of techniques.

The goal of these techniques is to reduce the volume of runoff generated by the first one-inch of rain. Other Green Infrastructure Practices that employ runoff reduction techniques may be used in lieu of these techniques with proper documentation of design criteria and details.

How are Runoff Reduction techniques sized on SFR developments?

Applicants have the choice to meet this requirement by following the practices in this technical guidance document or by utilizing the Blue Book and the CSS to design an appropriate stormwater management plan. The amount of volume to be reduced on site is directly related to the drainage area contributing runoff to the treatment technology.

What needs to be submitted?

Applicants must develop a site plan using the checklist found at http://www.atlantaga.gov/. The checklist items relevant to stormwater management include the following:

- Existing and proposed ground contours and elevations;
- Sanitary and storm sewer, structures and easements;

- Location, configuration and finished floor elevations for existing and proposed building structures;
- Location, configuration and finished elevations for existing and proposed paved areas;
- Erosion and sediment control practices in conformance with the Manual for Erosion and Sediment Control in Georgia, Chapter 6; and

Pertinent to stormwater the following guidance applies to all designs:

- Stormwater runoff from the first one inch of rainfall must be captured on site and dissipated through the use of infiltration, evapotranspiration or alternate use (e.g. irrigation). It cannot run off the site.
- Concentrated stormwater discharge from a downspout, cistern, or any collection device shall be located a distance of no less than 10 feet from any common property line.
- Details of all Green Infrastructure Practices shall be attached to the site plan using, where possible, specification sheets from this document or sets of plans of equal detail and coverage.

What is in the rest of this document?

The remainder of the document contains:

(1) A set of six information/specification sheets, one for each of the six Green Infrastructure Controls recommended for use. For each the last two pages are a tear-off set of specifications that can be filled in and stapled to construction plans.
(2) An Appendix that describes how to conduct infiltration testing.
(3) An Appendix that describes the types of vegetation recommended for use for those Controls that feature vegetation as part of the treatment approach.

THIS PAGE INTENTIONALLY LEFT BLANK

CISTERN

SINGLE FAMILY RESIDENTIAL GUIDE
CITY OF ATLANTA, GEORGIA
DEPARTMENT OF WATERSHED MANAGEMENT

Cisterns are low impact development practices that store rainwater for later use. Rain is collected from a downspout system, screened to remove trash and leaves and conveyed to a storage container for subsequent use. Unless an advanced filtration system is used, water stored in the cistern is for non-potable water use only. If properly sized, they can provide significant reductions in stormwater runoff rates, volumes and pollutant loads from residential sites. Rain barrels may be part of an overall stormwater management system; however, by themselves they may not be sufficient to meet the requirements of this ordinance.

1,500 Gallon Cistern
Source: LID Urban Design Tools

Location

- Consider the size of the contributing drainage areas, and projected water needs, to determine how large a storage tank is needed. Cisterns should drain only impervious areas – preferably rooftops.
- Pick a location keeping in mind: (1) ease in connecting roof drains, (2) overflow to downslope areas, (3) level area, (4) location relative to intended water uses, (5) other utility conflicts, (6) electrical connections if applicable, (7) residential emergency ingress/egress, (8) leaf screen option, (9) location of hoses or other water distribution components, and (10) aesthetic considerations.

Design

- To fully meet the Atlanta standard, cistern capacity must be designed for a 1 inch storm. A good rule of thumb is that when sizing a cistern for the one inch rain standard, each square foot of rooftop will contribute 0.6 gallons of runoff. A one-hundred square foot roof surface will fill a 55 gallon barrel.
- Cisterns come in sizes from a 55 gallon rain barrel to a 1,500 gallon cistern. If the cistern cannot hold the full inch one alternative is to divert overflow to another low impact development structure such as a filter strip, or rain garden.
- Measure contributing roof area width from the drip line of the overhang to the roof peak ignoring the slant, and the length. The width times the length in feet is the drainage area. Multiply that by 0.6 gallons and that is the size of the cistern you will need to fully meet the one-inch rainfall standard.
- All holding tanks should be opaque to prevent algae growth.

- Pretreatment of water entering the cistern will remove debris, dust, leaves, and other material. Pretreatment options are illustrated on the specification sheet. One or more options should be chosen.

Example In-Line Screen - Leaf Beater by Rain Harvest Systems

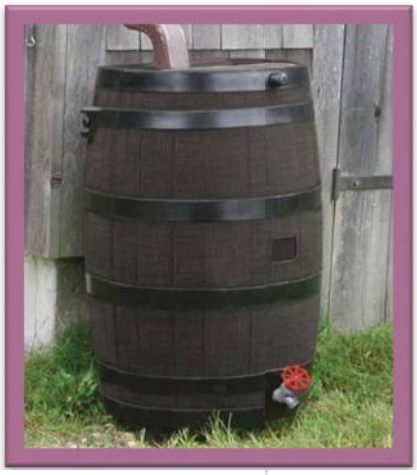

Example Rain Barrel

- The cistern should have an overflow pipe so that when the tank reaches capacity, the rainwater will be directed away from adjacent buildings. More than one cistern can be linked to increase storage capacity.
- Drainage system components leading to the cistern should have a minimum slope of 2% for gravity drainage to the cistern.
- For more complex designs a rainwater harvesting model is provided by the North Carolina State University at http://www.bae.ncsu.edu/topic/waterharvesting.
- Gravity feed drip irrigation kits are available from several suppliers as well as complete instructions on how to design an irrigation system for the low pressure of a cistern system without a pump.

Maintain

- To maintain the storage capacity of the cistern rainwater should be used regularly and a draw down plan initiated.
- Routine checks of the intake and leaf screening components should be done once in the spring and periodically during the fall if leaves fall on the contributing roof area.
- Insure mosquito screen is tight.
- Inspect and if necessary clean out tank annually by scrubbing and letting water drain through low flow plug.
- Check connections for leaks; and inspect overflow for erosion.

Example Linked Cisterns
Source: http://www.dic.com

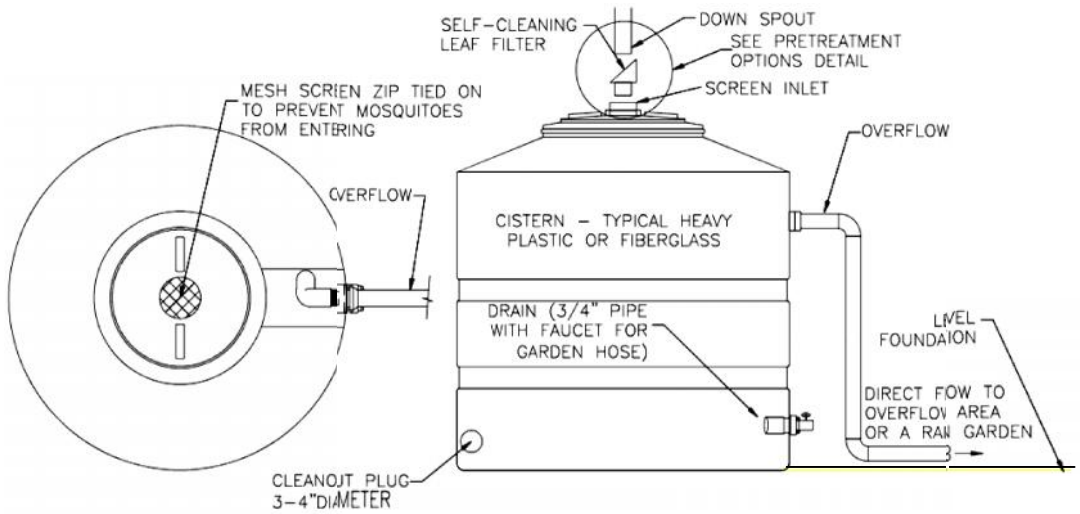

TYPICAL COMPONENTS (ATTACH MANUFACTURER'S SPECIFICATIONS)

CONSTRUCTION STEPS:

1. Locate cistern for: (1) ease in connecting roof drains, (2) overflow to downslope area, (3) level area, (4) location relative to intended water uses, (5) other utility conflicts, (6) electrical connections if applicable, (7) emergency ingress/egress, (8) leaf screen option, (9) location of hoses or other water distribution components, and (10) aesthetic considerations.
2. Depending on use review and follow applicable plumbing code.
3. Provide level foundation of compacted earth, blocks, gravel or other hard long lasting surface.
4. Place cistern tank and review all connections for layout and sizing.
5. Cut and route downspouts or other rainwater delivery components, leaf screen option(s) chosen (circle selected options in Pretreatment Options Detail figure), and mosquito screen as applicable. Strap and support as needed.
6. Install water outlet connections including pumps as applicable. Follow manufacturer's specification for all connections and fittings including inlet, overflow, and clean out.
7. Extend overflow to adequate non-eroding discharge point no less than 10 feet from any common property line.
8. Test cistern by filling with water and testing all components in turn – including spraying water on the roof and observing flow.
9. Consider appearance and final landscaping and screening. Complete construction, landscaping, etc.

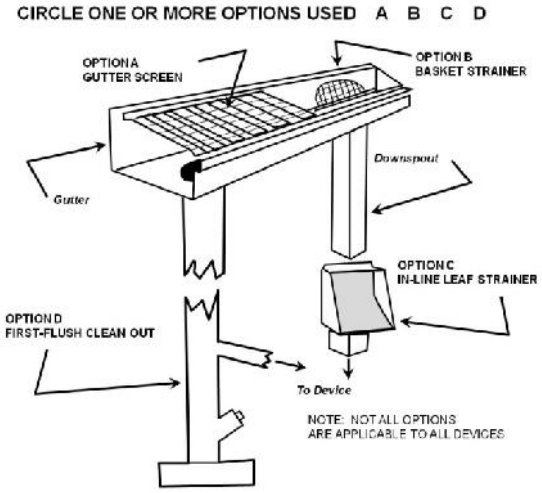

PRETREATMENT OPTIONS DETAIL

CITY OF ATLANTA DEPARTMENT OF WATERSHED MANAGEMENT	NAME/ADDRESS:	CISTERN SPECIFICATIONS PAGE 1 OF 2

SKETCH LAYOUT

PROVIDE PLAN AND ELEVATION VIEWS OF CISTERN AND HOUSE SHOWING ROOF AREA DIRECTED TO CISTERN AND KEY DIMENSIONS AND CONNECTIONS AND OVERFLOW RELATIVE TO PROPERTY LINE.

NOTES:

1. ATTACH MANUFACTURER'S SPECIFICATIONS AND OTHER DETAILS

SIZING CALCULATION:

0.6 GALLONS * SQ FT OF ROOF AREA DIRECTED TO CISTERN)

ROOF AREA DIRECTED TO CISTERN= _____ SQ FT

CISTERN SIZE= _____ GAL

TYPE OF CISTERN/MANUFACTURER:

_____

MAINTENANCE:

1. TO MAINTAIN THE STORAGE CAPACITY OF THE CISTERN RAINWATER SHOULD BE USED REGULARLY
2. ROUTINE CHECKS OF THE INTAKE AND LEAF SCREENING COMPONENTS SHOULD BE DONE ONCE IN THE SPRING AND PERIODICALLY DURING THE FALL IF LEAVES FALL ON THE CONTRIBUTING ROOF AREA.
3. INSPECT AND IF NECESSARY CLEAN OUT TANK ANNUALLY BY SCRUBBING AND LETTING WATER DRAIN THROUGH LOW FLOW PLUG. CHECK CONNECTIONS FOR LEAKS; AND INSPECT OVERFLOW FOR EROSION.

DRY WELL

SINGLE FAMILY RESIDENTIAL GUIDE
CITY OF ATLANTA, GEORGIA
DEPARTMENT OF WATERSHED MANAGEMENT

Dry wells are comprised of seepage tanks set in the ground and, in Atlanta's tight soils, surrounded with stone that are designed to intercept and temporarily store stormwater runoff until it infiltrates into the soil. Alternately the pit can be filled with stone with water entering via a perforated pipe with a perforated standpipe in place of the tank.

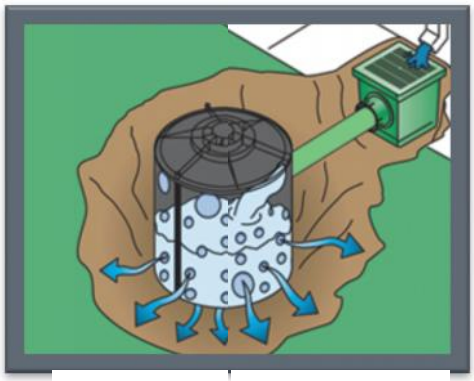

Source: www.earthcontactproducts.com/

Dry wells are particularly well suited to receive rooftop runoff entering the tank via an inlet grate (shown right) or direct downspout connection (below right). When properly sized and laid out dry wells can provide significant reductions in stormwater runoff and pollutant loads.

Location

- Dry wells must be located at least 10 feet from building foundations and 10 feet from property lines.
- To reduce the chance of clogging, dry wells should drain only impervious areas, and runoff should be pretreated with at least one of the leaf removal options to remove debris and larger particles.
- The height of the tank should not exceed 45 inches unless infiltration testing has been done to insure a drain time of 72 hours or less.
- Dry wells should be located in a lawn or other pervious (unpaved) area and should be designed so that the top of the dry well is located as close to the surface as possible.
- Dry wells should <u>not</u> be located: (1) beneath an impervious (paved) surface; (2) above an area with a water table or bedrock less than two feet below the trench bottom; (3) over other utility lines; or, (4) above a septic field. Always call 811 to locate utility lines before you dig.

Construction

- Consider the drainage area size and the soil infiltration rate when determining the size of the dry well, (see table on next page).
- The sides of the excavation should be trimmed of all large roots that will hamper the installation of the permeable drainage fabric used to line the sides and top of the dry well.
- The dry well hole should be excavated 1 foot deeper and two feet larger in diameter than the well to allow for a 12 inch stone fill jacket.

- The native soils along the bottom of the dry well should be scarified or tilled to a depth of 3 to 4 inches.
- Fill below and around dry well approximately 12 inches of clean, washed #57 stone. #57 stone averages ½ inch to 1-1/2 inches.
- Fill the final 6 inches of the excavation with native soil. Optionally pea gravel or #8 stone can be carried to the surface.
- For rooftop runoff, install a leaf screen in the gutter or down spout prior to entering the dry well to prevent leaves and other large debris from clogging the dry well. For non-rooftop runoff, precede dry well with an in ground sump grate inlet leaf trap.
- An overflow, such as a vegetated filter strip or grass channel, should be designed to convey the stormwater runoff generated by larger storm events safely bypassing the dry well.
- The optional design involves placement of a vertical standpipe connected to the inlet pipe. See figure below.

Source: nancysteele.files.wordpress.com

The table below can be used to size a dry well system. Given the tank height and diameter the contributing drainage area in square feet treated can be read. So, for example, if a 10 by 50 foot roof is to be treated the total roof area is 20*50 = 500 square feet. This could be handled by one tank 60" high, 30" diameter. It can also be handled by two tanks 30" high and 24" in diameter.

Gravel Bed Depth (inches)	Tank Height (inches)	Tank Inside Diameter (inches)				
		24	30	36	42	48
		Contributing Area Captured (square feet)				
6	30	258	345	447	563	692
12	30	285	380	490	615	755
6	60	461	622	809	1022	1263
12	60	489	657	852	1075	1325
	Hole Depth (inches)	6" Perforated Standpipe Gravel Filled Hole Diameter (inches)				
		24	30	36	42	48
		Contributing Area Captured (square feet)				
	24	30	46	65	88	114
	30	38	58	82	110	142
	36	46	69	98	132	171
	42	53	81	114	154	199
	48	61	92	130	176	228
	60	76	115	163	219	285

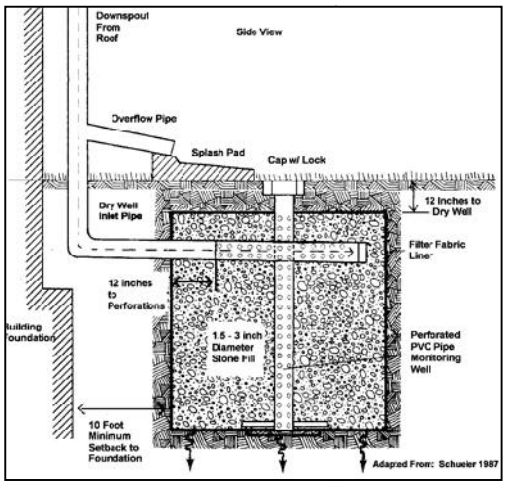

If you elect to measure infiltration rate and find it is higher than 0.5 in/hr length of the dry well size can be reduced. For every 0.5 in/hr increase in measured infiltration rate above 0.5 in/hr subtract ten percent of the required dry well size as measured in square feet captured.

Vegetation

- The landscaped area above the surface of a dry well should be covered with pea gravel when water enters a dry well through surface features rather than the pipe. This pea gravel layer provides sediment removal and additional pretreatment upstream of the dry well and can be easily removed and replaced when it becomes clogged.
- Alternatively, a dry well may be covered with an engineered soil mix, and planted with managed turf or other herbaceous vegetation.

Maintenance

Annual maintenance is important for dry wells, particularly in terms of ensuring that they continue to provide measurable stormwater management benefits over time.

- Inspect gutters and downspouts removing accumulated leaves and debris.
- Inspect dry well following rainfall events.
- If applicable, inspect pretreatment devices for sediment accumulation. Remove accumulated trash and debris.
- Inspect top layer of filter fabric for sediment accumulation. Remove and replace if clogged.

THIS PAGE INTENTIONALLY LEFT BLANK

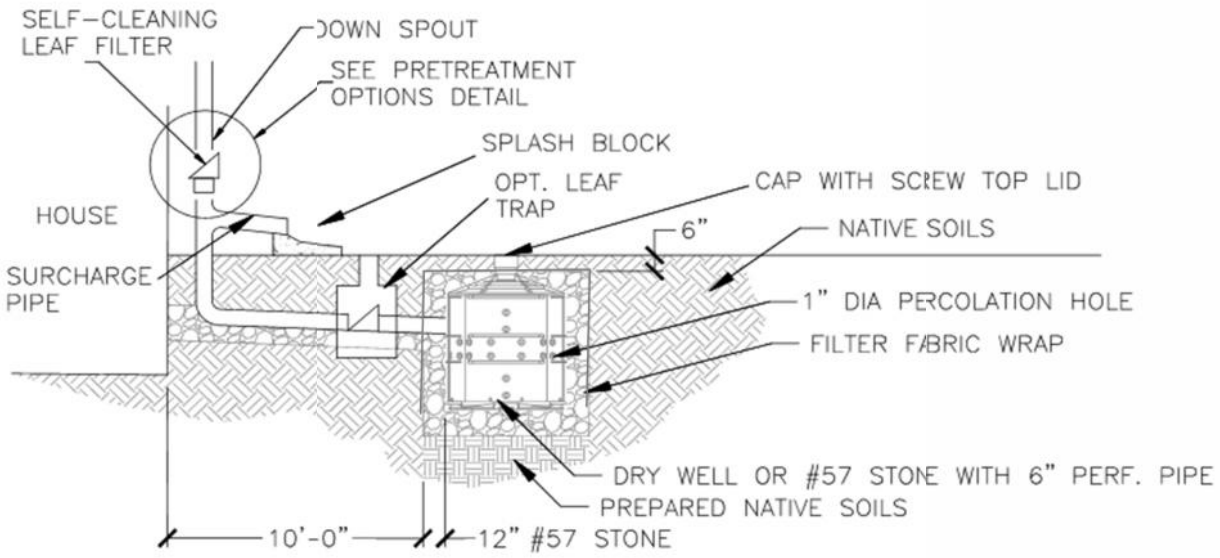

TYPICAL COMPONENTS (ATTACH MANUFACTURER'S SPECIFICATIONS)

CONSTRUCTION STEPS:

1. Review potential dry well areas and layout. Dry wells should not be located: (1) beneath an impervious (paved) surface; (2) above an area with a water table or bedrock less than two feet below the trench bottom; (3) over other utility lines; or, (4) above a septic field. Insure outlet daylights at least ten feet from property line.
2. Measure the area draining to the dry well and determine required size from the table on the next page.
3. If soil is a concern perform infiltration test according to Appendix A. If the rate is less than 0.25 in/hr this method cannot be used. If the rate is more than 0.50 in/hr the storage volume may be decreased 10% for every 0.50 in/hr infiltration rate increase above 0.50 in/hr.
4. Measure elevations and dig the hole to the required dimensions. Scarify the bottom soil surface 3".
5. Place and tamp 6" to 12" of #57 gravel in bottom. Pea gravel can be substituted for leveling purposes in the upper three inch layer below the tank.
6. Place and secure filter cloth down sides of the excavation leaving enough to fold over the top below the soil and turf.
7. Place tank and install piping. Bond top of tank in place.
8. Cut and route downspouts or other rainwater delivery components, leaf screen option(s) chosen (circle selected options in Pretreatment Options Detail figure). Strap and support as needed.
9. Create a safe overflow at least 10 feet from your property edge and insure it is protected from erosion.
10. Test connections with water flow.
11. Fill with gravel jacket around tank and place permeable fabric above between gravel and soil.
12. Backfill with soil/sod or pea gravel.
13. Consider aesthetics as appropriate and erosion control for overflow.

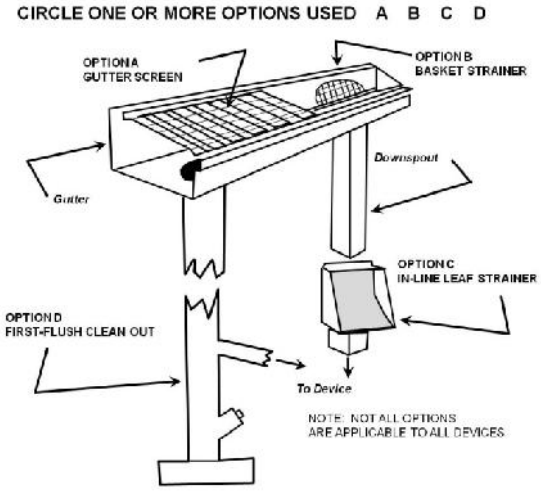

PRETREATMENT OPTIONS DETAIL

CITY OF ATLANTA DEPARTMENT OF WATERSHED MANAGEMENT	NAME/ADDRESS:	DRY WELL SPECIFICATIONS PAGE 1 OF 2

SKETCH LAYOUT

PROVIDE PLAN AND ELEVATION VIEWS OF DRY WELL AND HOUSE SHOWING ROOF AREA DIRECTED TO DRY WELL AND KEY DIMENSIONS, CONNECTIONS AND OVERFLOW RELATIVE TO PROPERTY LINE.

SIZING CALCULATION:

Gravel Bed Depth (inches)	Tank Height (inches)	Tank Inside Diameter (inches)				
		24	30	36	42	48
		Contributing Area Captured (square feet)				
6	30	258	345	447	563	692
12	30	285	380	490	615	755
6	60	461	622	809	1022	1263
12	60	489	657	852	1075	1325

Hole Depth (inches)	6" Perforated Standpipe Gravel Filled Hole Diameter (inches)				
	24	30	36	42	48
	Contributing Area Captured (square feet)				
24	30	46	65	88	114
30	38	58	82	110	142
36	46	69	98	132	171
42	53	81	114	154	199
48	61	92	130	176	228
60	76	115	163	219	285

MEASURE CONTRIBUTING DRAINAGE AREA AND READ AREA FOR GIVEN MEDIA DEPTH.

CONTRIBUTING DRAINAGE AREA= _____ SQ FT
TANK DIAMETER= _____ INCHES
TANK HEIGHT= _____ INCHES
GRAVEL BED DEPTH= _____ (6 OR 12 INCHES)
ALTERNATIVE STANDPIPE DESIGN
HOLE DIAMETER= _____ INCHES
HOLE DEPTH= _____ INCHES

MAINTENANCE:

1. INSPECT GUTTERS AND DOWNSPOUTS REMOVING ACCUMULATED LEAVES AND DEBRIS, CLEANING LEAF REMOVAL SYSTEM(S).
2. IF APPLICABLE, INSPECT PRETREATMENT DEVICES FOR SEDIMENT ACCUMULATION. REMOVE ACCUMULATED TRASH AND DEBRIS.
3. INSPECT DRY WELL FOLLOWING A LARGE RAINFALL EVENT TO INSURE OVERFLOW IS OPERATING AND FLOW IS NOT CAUSING PROBLEMS.

VEGETATED FILTER STRIPS

SINGLE FAMILY RESIDENTIAL GUIDE

CITY OF ATLANTA, GEORGIA
DEPARTMENT OF WATERSHED MANAGEMENT

A vegetated filter strip can be an attractive and functional addition to your home landscape. Vegetated filter strips (also known as grass filters) are uniformly graded, vegetated areas of land designed to receive rainwater as sheet flow and slow and filter stormwater runoff from roof downspouts or parking areas. Vegetated filter strips can provide significant reductions in stormwater runoff and pollutant loads in your local watershed.

Location

- Take note of the drainage patterns to determine the best location for a vegetated filter strip. Assess the drainage area flow paths on your property, and the slope of the drainage area. Ideal locations are places where there is a gentle slope away from the structure or paved area, the area is relatively flat, and where the flow can be evenly disbursed along the top of the filter area.
- The ideal slope of the vegetated filter strip is between 1 and 5%. Greater slopes would encourage the formation of concentrated flow within the filter strip, while lesser slopes would encourage unplanned ponding. If the slope is greater, terracing can be used with level spreaders between each terrace.
- Placing a filter strip over utilities is acceptable except where the amended soil option is used. In that case insure utility locations are noted and care is taken in soil amendment actions. Amended or bermed filter strips should not be placed over a septic field.
- The length of the vegetated filter strip should be no less than 25 feet. If there is a permeable berm at the lower end, the length of the vegetated filter strip should be no less than 15 feet. Natural forested areas on site can be counted in the filter strip length total.
- The surface impervious area to any one discharge location cannot exceed 5,000 square feet.

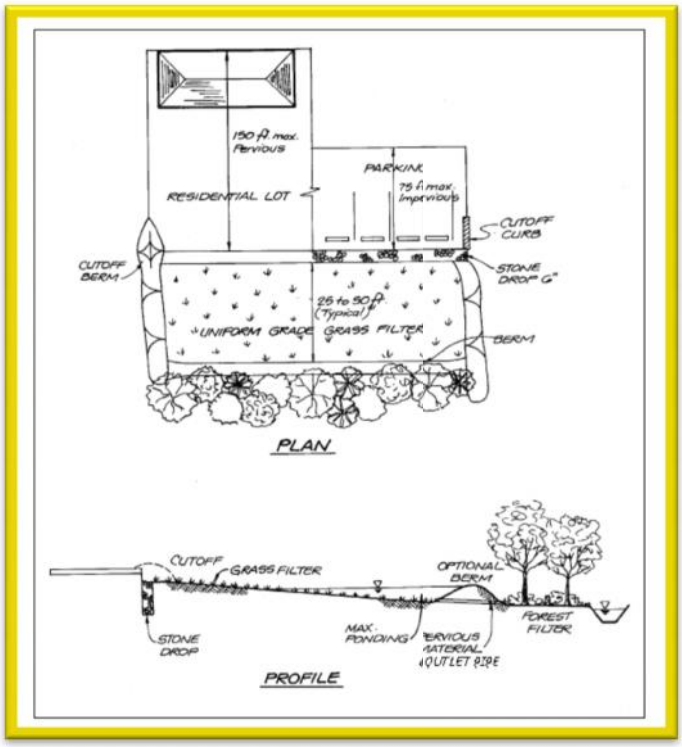

Source:
Center for Watershed Protection. 2009.
Coastal Stormwater Supplement to the
Georgia Stormwater Management Manual.

Construction

Level Spreader

- A level spreader must be used at the upstream end of the filter strip to evenly distribute stormwater runoff. A level spreader is a small trench filled with pea gravel or # 8 stone installed along a level contour.
- The level spreader should be 12' to 18" wide and 6" to 12" deep depending on the amount of expected flow. Larger diameter stone may be required to stabilize entry points for larger contributing impervious areas.
- To help insure more even discharge of flow into the filter strip, notches can be cut in the level spreader at intervals allowing overflowing water to enter at several locations ahead of general overflow.
- The level spreader can be connected to the downspout through a T-connection to perforated pipes embedded in the flow spreader trench (see figure).

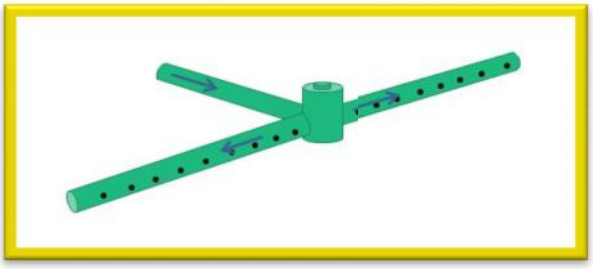

- Insure the overflow points are protected from erosion and not blocked by vegetation.
- If the impervious drainage area to any one entry point (e.g. a downspout) is less than 1,000 square feet appropriate level spreaders may be waived if flow will flow as a sheet through the strip area. In this case simple splash blocks (see figure) can be used to introduce flow into turf (yard) areas.

Source: www.neorsd.org

Amended Soil Design Option

- Increased infiltration and a doubling of the ability to meet the one-inch standard can be achieved by amending the soil within the filter strip by tilling the existing soil 12" deep and mixing 4" of compost.

Berm Design Option

- A greater ability to meet the one-inch standard can be achieved through the use of a permeable berm at the bottom end of the filter strip. The permeable berm is used to temporarily store stormwater runoff within the filter strip, which increases the infiltration and reduces the required width of the filter strip.
- Permeable berms should be constructed of well drained soils (sand, gravels, and sandy loams) that support plant growth and should be no more than 12" high.
- Appropriately sized outlets should be provided within permeable berms to ensure that vegetated filter strips will drain within 24 hours following the end of a rainfall event.
- A stone-protected overflow area through the berm may be used to manage the stormwater runoff generated by large storm events. The overflow point must be at least ten feet from the property line if flow is onto adjoining property. Erosion protection is critical.

Design Table

Measure the rooftop and any other area that is going to be directed to the filter strip. From the site layout select the size and type of filter strip from the table to meet the one inch design standard. For example, for a 1,000 square foot rooftop conventional filter strip the filter strip surface area must be at least 2,000 square feet with a minimum flow length of 25 feet. Built with a berm it can have a surface area of 500 square feet and have a minimum flow length of 15 feet.

Contributing Drainage Area (square feet)	Filter Strip Type		
	Conventional	Amended Soil	Berm
	Filter Strip Area (sq ft)		
100	200	70	50
500	1000	350	250
1000	2000	670	500
2000	4000	1400	1000
3000	6000	2700	1500
4000	8000	5400	2000
5000	10000	6700	2500

Vegetation

- Vegetation commonly planted on vegetated filter strips includes turf, shrubs, trees, and other herbaceous vegetation.
- Choose grasses and other vegetation that will be able to tolerate the stormwater runoff rates and volumes that will pass through the vegetated filter strip.
- Vegetation used in filter strips should be able to tolerate both wet and dry conditions.
- Refer elsewhere within this document for more guidance.

Maintenance

Maintain the vegetated filter strip so that it will continue to provide measurable stormwater management benefits over time.

- Water as needed to promote plant growth and survival especially in the first two seasons.
- Provide normal turf or garden maintenance - mow, prune, and trim as needed.
- Inspect the vegetated filter strip following rainfall events. Fix erosion issues immediately.
- Remove accumulated trash, sediment and debris.

THIS PAGE INTENTIONALLY LEFT BLANK

TYPICAL COMPONENTS

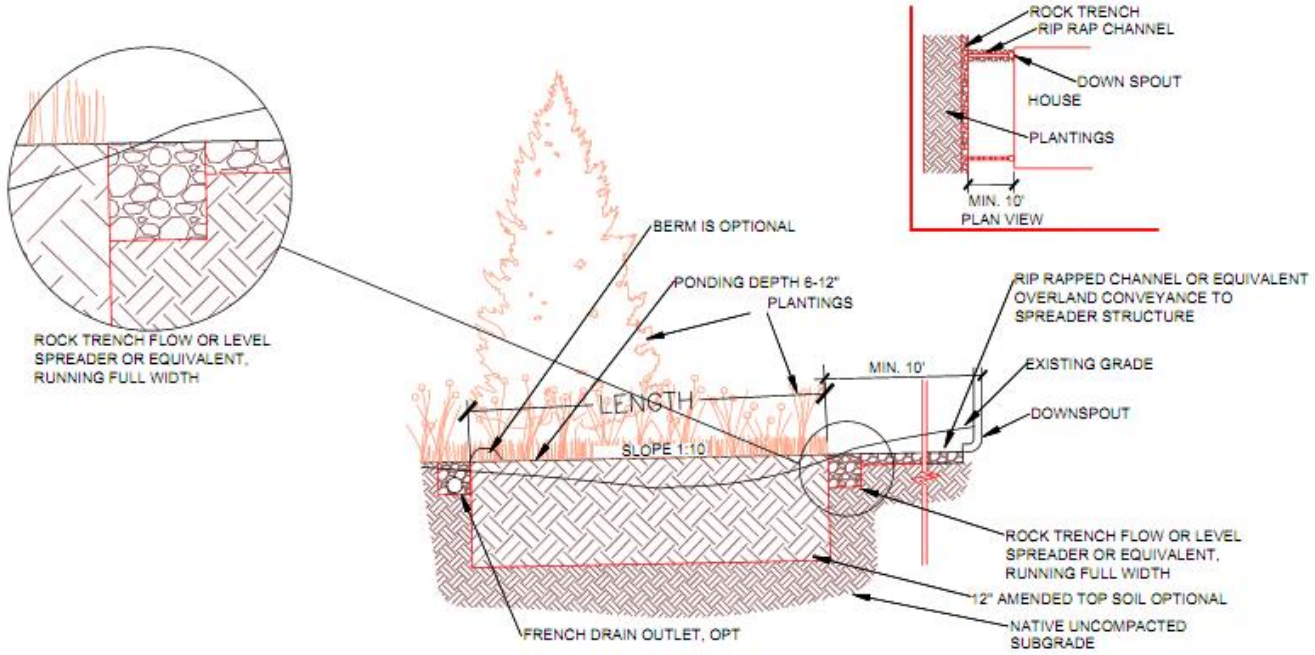

CONSTRUCTION STEPS:

1. Review potential filter strip areas and layout. Filter strips should slope between 1% and 5% away from the structure and should <u>not</u> be located above a septic field. Placing a filter strip over utilities is acceptable except where the amended soil option is used. In that case insure utility locations are noted and care is taken in soil amendment actions. If there is a concentrated overflow insure it is at least ten feet from adjacent property.
2. Measure the area draining to the filter strip and determine required surface area and minimum length from the table on the next page. Determine the desired filter strip and flow spreader options.
3. Lay out and mark filter strip area, flow spreader line and inlets.
4. Construct flow spreader filling trench with appropriate gravel and noting overflow points.
5. Construct filter strip option, prepare soil.
6. Construct erosion control at the flow entrance and exit points as applicable.
7. Plant dense vegetation according to plan, or sod/seed. Insure an irrigation plan is in place.
8. Insure temporary erosion control is in place as needed until vegetation establishment.

CITY OF ATLANTA DEPARTMENT OF WATERSHED MANAGEMENT	NAME/ADDRESS:	FILTER STRIP SPECIFICATIONS PAGE 1 OF 2

SKETCH LAYOUT

PROVIDE PLAN AND ELEVATION VIEWS OF FILTER STRIP AND HOUSE SHOWING ROOF AREA DIRECTED TO FILTER STRIP AND KEY DIMENSIONS, CONNECTIONS AND OVERFLOW RELATIVE TO PROPERTY LINE.

SIZING CALCULATION:

Contributing Drainage Area (square feet)	Filter Strip Type		
	Conventional	Amended Soil	Berm
	Filter Strip Area (sq ft)		
100	200	70	50
500	1000	350	250
1000	2000	670	500
2000	4000	1400	1000
3000	6000	2700	1500
4000	8000	5400	2000
5000	10000	6700	2500

MEASURE CONTRIBUTING DRAINAGE AREA AND READ AREA FOR GIVEN FILTER TYPE.

CONTRIBUTING DRAINAGE AREA= _____ SQ FT
FILTER STRIP AREA= _____ SQ FT
CONVENTIONAL – 25' MINIMUM LENGTH
BERM OPTION – 15' MINIMUM LENGTH

MAINTENANCE:

1. INSPECT GUTTERS AND DOWNSPOUTS REMOVING ACCUMULATED LEAVES AND DEBRIS, CLEANING LEAF REMOVAL SYSTEM(S).
2. IF APPLICABLE, INSPECT PRETREATMENT DEVICES FOR SEDIMENT ACCUMULATION. REMOVE ACCUMULATED TRASH AND DEBRIS.
3. WATER AS NEEDED TO PROMOTE PLANT GROWTH AND SURVIVAL ESPECIALLY IN THE FIRST TWO SEASONS.
4. PROVIDE NORMAL TURF OR GARDEN MAINTENANCE - MOW, PRUNE, AND TRIM AS NEEDED.
5. INSPECT THE VEGETATED FILTER STRIP FOLLOWING RAINFALL EVENTS. FIX EROSION ISSUES IMMEDIATELY.

MODIFIED FRENCH DRAIN

SINGLE FAMILY RESIDENTIAL GUIDE
CITY OF ATLANTA, GEORGIA
DEPARTMENT OF WATERSHED MANAGEMENT

Modified French Drains (MFD) are shallow trench excavations filled with stone that are designed to intercept and temporarily store stormwater runoff until it infiltrates into the soil. MFDs can provide significant reductions in stormwater runoff and pollutant loads. They are particularly well suited to receive rooftop runoff, but can also be used to receive stormwater runoff from other small impervious areas. In Atlanta, due to poor draining soils, only the daylighted French Drain version is allowed in residential applications. The perforated pipe is daylighted at its end allowing for overflow of larger storms and a failsafe mechanism should infiltration not be as anticipated.

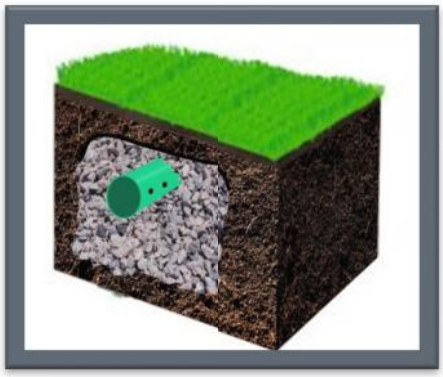

Location

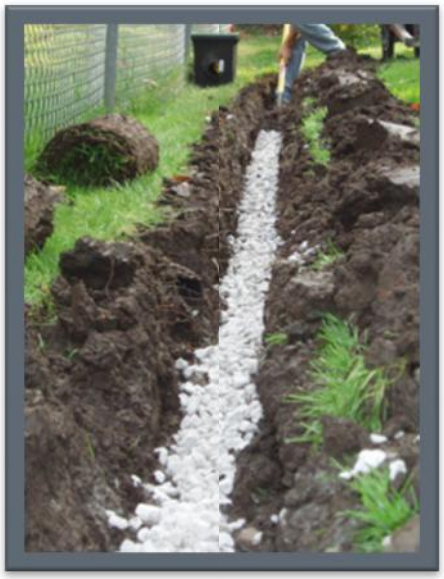

- MFD trenches should be located at least 5 feet from building foundations and 10 feet from buildings with basements and property lines. The top end of the MFD can be adjacent to the building to connect downspouts but should be directed away from the structure.
- MFDs should slope away from the structures. The slope of the MFD pipe should be between 0.5% and 6%. It can be serpentine or multi-pronged in construction if sufficient slope is available.
- To reduce the chance of clogging, MFDs should drain only impervious areas, and runoff should be pretreated with at least one of the leaf removal options to remove debris and larger particles.
- MFD gravel depths should be at least 18 inches and no more than 36 inches.
- MFDs should be located in a lawn or other pervious (unpaved) area and should be designed so that the top of the MFD is located as close to the surface as possible to reduce digging.
- MFDs should not be located: (1) beneath an impervious (paved) surface; (2) above an area with a water table or bedrock less than two feet below the trench bottom; (3) over other utility lines; or, (4) above a septic field. Always call 811 to locate utility lines before you dig.
- The downstream end of the pipe must daylight for overflows more than ten feet from the property line.
- The desirable soil infiltration rate suitable for a MFD is 0.50 inches per hour (in/hr) or greater. If there is concern due to tight soils when digging, an infiltration test should be done as per Appendix A.

Construction

- As a rule-of-thumb there should be about 23 cubic feet of stone for every 100 square feet of rooftop. The table provides MFD length requirements for different depths.
- The assumed width in the table is 24 inches. The width can be from 18 to 32 inches. Required lengths should be adjusted proportionately if other widths are used.
- The sides of the excavation should be trimmed of all large roots that will hamper the installation of the permeable drainage fabric used part way down the sides and above the gravel layer on top of the MFD.

Rooftop Area (square feet)	Depth of Gravel From Top of Pipe (inches)			
	18	24	30	36
	Required Linear Feet of MFD			
100	6	5	4	3
500	30	25	20	15
1000	60	45	40	35
2000	120	95	75	65
3000	185	140	115	100
4000	245	190	155	130
5000	305	235	195	165

- The native soils along the bottom of the MFD should be scarified or tilled to a depth of 3 to 4 inches.
- Fill the MFD with clean, washed #57 stone embedding a six inch diameter perforated pipe in the top of the stone such that the stone covers the top of the pipe. #57 stone averages ½ inch to 1-1/2 inches.
- The pipe should have 3/8 inch perforations, spaced 6 inches on center, and have a minimum slope of 0.5% and a maximum slope of 6%.
- The perforated pipe must daylight at the downstream end of the trench.
- An overflow, such as a vegetated filter strip or grass channel, should be designed to convey the stormwater runoff generated by larger storm events safely out of the downstream end of the MFD.
- Place permeable landscape fabric over gravel to keep soil or pea gravel from migrating into the gravel and filling the pore spaces, and leave four to six inches above the pipe to the ground surface.
- Cover with top soil and sod or with pea gravel.
- For rooftop runoff, install one or more leaf screen options prior to entering the MFD to prevent leaves and other large debris from clogging the MFD. For driveway or parking runoff a screened inlet grate over a sump or pea gravel pit can be used to settle out material prior to entering the pipe.

Vegetation

- A MFD is normally covered with topsoil and managed turf or other herbaceous vegetation.
- As an alternative, the area above the surface of a MFD may be covered with pea gravel (or larger depending on the inflow rates) to allow for incidental lateral inflow along the edge of ground level impervious surfaces.
- The downstream end of the pipe must be stabilized and can be landscaped for aesthetics.

Maintenance

Annual maintenance is important for MFDs.

- Inspect gutters/downspouts removing accumulated leaves and debris, cleaning leaf removal system(s).
- Inspect any pretreatment devices for sediment accumulation. Remove accumulated trash and debris.
- Inspect MFD following a large rainfall event to insure overflow is operating and flow is not causing problems.

TYPICAL COMPONENTS (ATTACH MANUFACTURER'S SPECIFICATIONS)

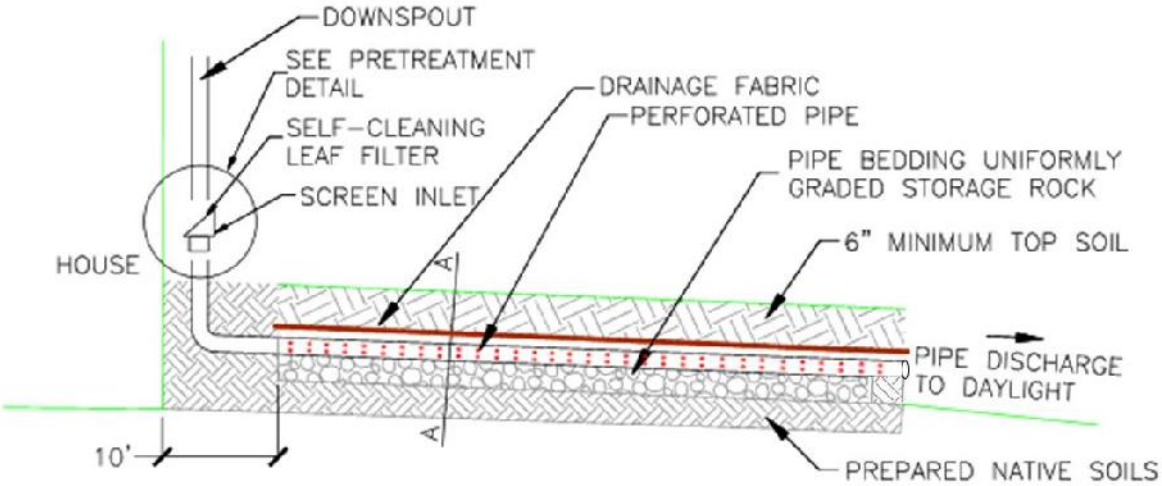

CONSTRUCTION STEPS:

1. Review potential MFD areas and layout. MFDs should slope between 0.5% and 6% away from the structure and should not be located: (1) beneath an impervious (paved) surface; (2) above an area with a water table or bedrock less than two feet below the trench bottom; (3) over other utility lines; or, (4) above a septic field. Insure outlet daylights at least ten feet from property line.
2. Measure the area draining to the MFD and determine required length from the table on the next page using assumed width and gravel depth, and plan route and excavation depth.
3. If soil is a concern perform infiltration test according to Appendix A. If the rate is less than 0.25 in/hr this method cannot be used. If the rate is more than 0.50 in/hr the length of the ditch may be decreased 10% for every 0.50 in/hr infiltration rate increase above 0.50 in/hr.
4. Measure elevations and lay out the MFD to the required dimensions marking the route and required excavation depths. Often a level line (torpedo level) is used.
5. Remove sod using a sod cutter if appropriate. Excavate ditch to the depth of the gravel plus six inches for topsoil/pea gravel and three additional inches to accommodate half the pipe depth. Be careful not to compact soils in the bottom. Level the bottom laterally as much as possible to maximize infiltration area. Roughen bottom to a depth of at least three inches and trim roots.
6. Place and tamp gravel in ditch to planned depth placing the pipe three inches deep in the upper portion of the gravel. Then place and gently tamp gravel until it covers the pipe.
7. Place drainage fabric over top of pipe and stone.
8. Place topsoil and sod or pea gravel.
9. Cut and route downspouts or other rainwater delivery components, leaf screen option(s) chosen (circle selected options in Pretreatment Options Detail figure). Strap and support as needed.
10. Create a safe overflow at least 10 feet from your property edge and insure it is protected from erosion.

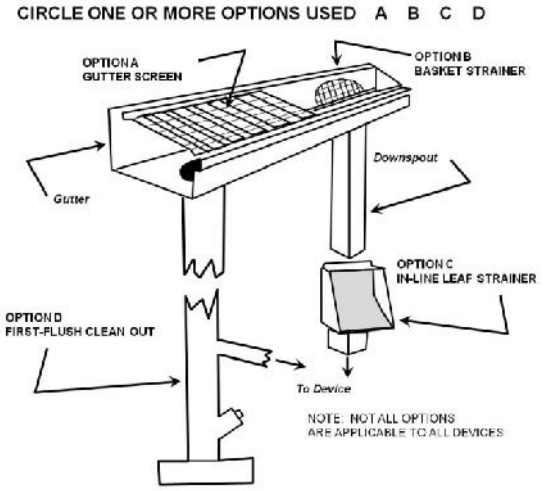

PRETREATMENT OPTIONS DETAIL

CITY OF ATLANTA DEPARTMENT OF WATERSHED MANAGEMENT	NAME/ADDRESS:	MFD SPECIFICATIONS PAGE 1 OF 2

SKETCH LAYOUT

PROVIDE PLAN AND ELEVATION VIEWS OF MFD AND HOUSE SHOWING ROOF AREA DIRECTED TO MFD AND KEY DIMENSIONS, CONNECTIONS AND OVERFLOW RELATIVE TO PROPERTY LINE.

SIZING CALCULATION:

Rooftop Area (square feet)	Depth of Gravel From Top of Pipe (inches)			
	18	24	30	36
	Required Linear Feet of MFD			
100	6	5	4	3
500	30	25	20	15
1000	60	45	40	35
2000	120	95	75	65
3000	185	140	115	100
4000	245	190	155	130
5000	305	235	195	165

MEASURE CONTRIBUTING DRAINAGE AREA AND READ AREA FOR GIVEN MEDIA DEPTH.

CONTRIBUTING DRAINAGE AREA= _____ SQ FT
DEPTH OF STONE MEDIA= _____ INCHES
WIDTH OF TRENCH= _____ INCHES
LENGTH OF MFD= _____ FT

MAINTENANCE:

1. INSPECT GUTTERS AND DOWNSPOUTS REMOVING ACCUMULATED LEAVES AND DEBRIS, CLEANING LEAF REMOVAL SYSTEM(S).
2. IF APPLICABLE, INSPECT PRETREATMENT DEVICES FOR SEDIMENT ACCUMULATION. REMOVE ACCUMULATED TRASH AND DEBRIS.
3. INSPECT MFD FOLLOWING A LARGE RAINFALL EVENT TO INSURE OVERFLOW IS OPERATING AND FLOW IS NOT CAUSING PROBLEMS.

PERMEABLE PAVERS

SINGLE FAMILY RESIDENTIAL GUIDE
CITY OF ATLANTA, GEORGIA
DEPARTMENT OF WATERSHED MANAGEMENT

Permeable pavers are an alternative to traditional paving surfaces that can decrease stormwater runoff around your home. They are well suited for use when constructing sidewalks, parking areas, patios, and driveways. Permeable pavers consist of permeable interlocking or grid concrete pavers underlain by a drainage layer. A permeable paver system allows stormwater runoff to pass in between the paver surface and into an underlying stone reservoir, where it is temporarily stored and allowed to infiltrate into the underlying soils. Permeable pavers can provide significant reductions in stormwater runoff and pollutant loads in your watershed.

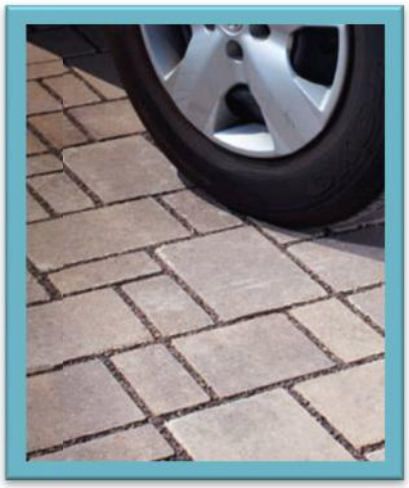

Location

- Maximum contributing drainage area ratio to surface area is 4:1.
- Permeable paver systems should be located at least 5 feet from building foundations and 10 feet from buildings with basements.
- Permeable pavers should not be located: (1) above an area with a water table or bedrock less than two feet below the gravel bottom; (2) over other utility lines; or, (3) above a septic field. Always call 811 to locate utility lines before you dig.
- Permeable pavers should drain only impervious areas. Drainage from other areas onto the pavers will eventually clog them.
- The desirable soil infiltration rate suitable for a paver system is 0.50 inches per hour (in/hr) or greater. If there is concern due to tight soils when digging an infiltration test should be done as per the appendix. If the rate is less than 0.5 in/hr an underdrain leading to daylight should be provided. Professional assistance should be obtained in this case.
- Permeable paver systems should be installed on slopes less than 6% to help insure even distribution of runoff over the infiltration surface, and should slope away from structures.

Construction

The table at the right provides Permeable Paver area size requirements for different depths of the #57 stone layer. This stone averages in size from ½ inch to 1-1/2 inches.

Example: A roof top is 1000 square feet. For a stone depth of 8 inches the required area of permeable pavers 280 sq ft.

Contributing Drainage Area (square feet)	Depth of Lower Stone Storage Layer (inches)				
	3	4	5	6	8
	Area of Pavers (square feet)				
100	54	45	39	34	27
500	280	230	200	170	140
1000	550	460	390	340	280
2000	1090	910	780	680	550
3000	1630	1360	1170	1020	820
4000	2180	1810	1560	1360	1090
5000	2720	2270	1940	1700	1360

- Permeable paver systems require multiple layers. Manufacturer's instructions, if they exist, should be followed in lieu of these guidelines.
- The top course consists of the pavers and a crushed aggregate material swept between the paver joints, such as #8 stone or 1/8" to 3/8" pea gravel. The thickness of this layer varies depending upon the depth of the paver.
- The bedding course consists of 2 to 3 inches of #8 stone or 1/8" to 3/8" pea gravel. The bedding course provides a level bed for setting the pavers evenly.
- The aggregate base course consists of #57 stone, a minimum of 3 inches. The aggregate base course acts as a reservoir to provide stormwater storage capacity and must be compacted.
- As an option, a permeable drainage fabric can be used to separate the aggregate base course and the subgrade.
- The subgrade layer is the layer of native soils below the gravel and the permeable drainage fabric (if used). The subgrade soil layer should be prepared by scarifying or tilling to a depth of 3 to 4 inches.

Maintenance

Maintenance is very important for permeable pavers systems, particularly in terms of ensuring that they continue to provide measurable stormwater management benefits over time.

- Remove accumulated sediment and debris from joint space monthly.
- Observe the permeable paver system for excessive ponding during storm events and repair as needed.
- Vacuum, sweep, or blow permeable paver surface quarterly to keep the surface free of sediment. New #8 stone may need to be swept into the space between stones as needed.
- Inspect permeable paver surface for deterioration annually. Repair or replace any damaged areas as needed.

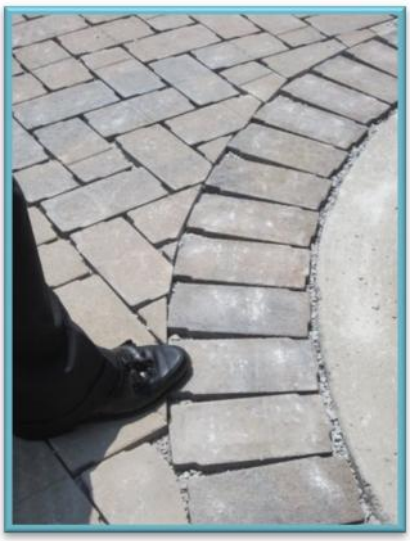

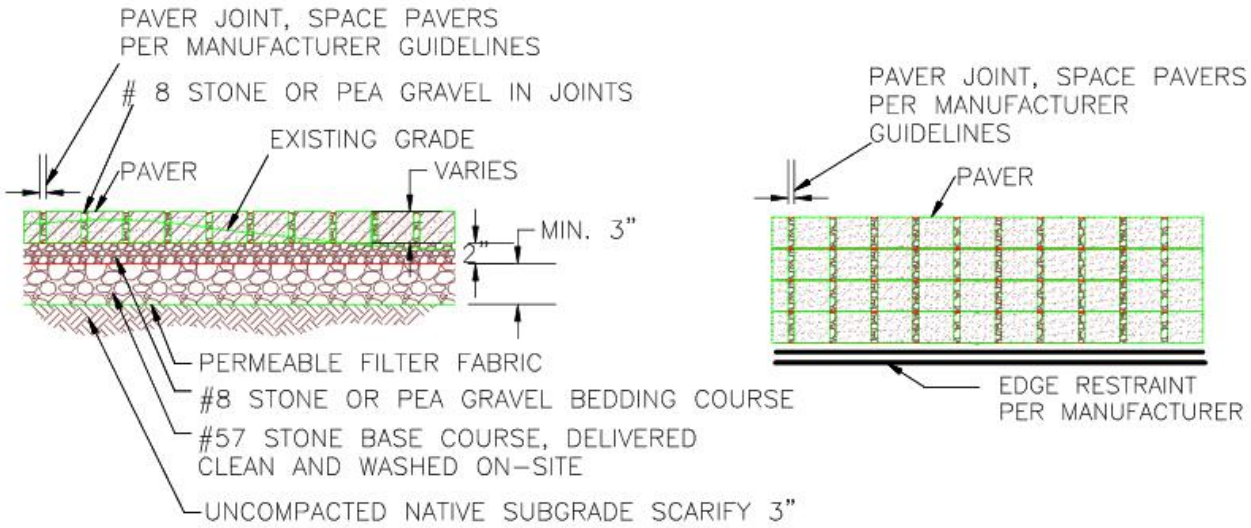

TYPICAL COMPONENTS (ATTACH MANUFACTURER'S SPECIFICATIONS)

CONSTRUCTION STEPS:

1. Review potential paver areas and layout. Pavers should slope less than 6% away from the structure and should not be located: (1) above an area with a water table or bedrock less than two feet below the trench bottom; (2) over other utility lines; or, (3) above a septic field.
2. Measure the area draining to the pavers and determine required paver area from the table on the next page based on the depth of the lower stone storage layer.
3. If soil is a concern perform infiltration test according to Appendix A. If the rate is less than 0.25 in/hr this method cannot be used. If the rate is more than 0.50 in/hr the pave area may be decreased 10% for every 0.50 in/hr infiltration rate increase above 0.50 in/hr.
4. Excavate area to appropriate depth and scarify soil to 3-4".
5. Place, level and compact gravel to planned depth in no more than 6" lifts. Three inch minimum depth.
6. Place, level and compact #8 stone or pea gravel bedding layer. Two inch minimum depth.
7. Lay paving stone one at a time or using mechanical placement as applicable. Cut stone at edges to fit.
8. Install edge restraints per manufacturer's specifications.
9. Sweep more #8 stone or pea gravel into stone joints until filled and even.
10. Cut and route downspouts or other rainwater delivery components, leaf screen option(s) chosen (circle selected options in Pretreatment Options Detail figure). Strap and support as needed.

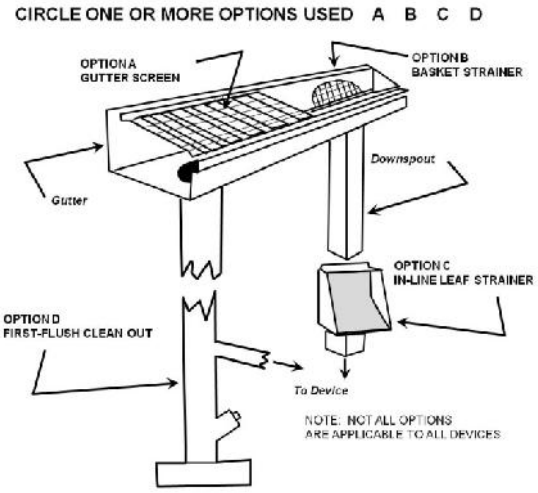

PRETREATMENT OPTIONS DETAIL

CITY OF ATLANTA DEPARTMENT OF WATERSHED MANAGEMENT	NAME/ADDRESS:	PERMEABLE PAVER SPECIFICATIONS PAGE 1 OF 2

SKETCH LAYOUT

PROVIDE PLAN AND ELEVATION VIEWS OF PERVIOUS PAVER AND HOUSE SHOWING ROOF AREA DIRECTED TO PAVERS AND KEY DIMENSIONS, CONNECTIONS AND ANY APPLICABLE OVERFLOW RELATIVE TO PROPERTY LINE. ATTACH MANUFACTURER'S SPECIFICATIONS IF APPLICABLE.

SIZING CALCULATION:

Contributing Drainage Area (square feet)	Depth of Lower Stone Storage Layer (inches)				
	3	4	5	6	8
	Area of Pavers (square feet)				
100	54	45	39	34	27
500	280	230	200	170	140
1000	550	460	390	340	280
2000	1090	910	780	680	550
3000	1630	1360	1170	1020	820
4000	2180	1810	1560	1360	1090
5000	2720	2270	1940	1700	1360

MEASURE CONTRIBUTING DRAINAGE AREA AND READ AREA FOR GIVEN MEDIA DEPTH.

CONTRIBUTING DRAINAGE AREA= _____ SQ FT
DEPTH OF STONE MEDIA= _____ INCHES
PAVER AREA= _____ SQ FT

MAINTENANCE:

1. REMOVE ACCUMULATED SEDIMENT AND DEBRIS FROM JOINT SPACE MONTHLY.
2. OBSERVE THE PERMEABLE PAVER SYSTEM FOR EXCESSIVE PONDING DURING STORM EVENTS AND REPAIR AS NEEDED.
3. VACUUM, SWEEP, OR BLOW PERMEABLE PAVER SURFACE QUARTERLY TO KEEP THE SURFACE FREE OF SEDIMENT. NEW STONE MAY NEED TO BE SWEPT INTO THE JOINTS AS NEEDED.
4. INSPECT PERMEABLE PAVER SURFACE FOR DETERIORATION ANNUALLY. REPAIR OR REPLACE ANY DAMAGED AREAS AS NEEDED.

RAIN GARDENS

SINGLE FAMILY RESIDENTIAL GUIDE
CITY OF ATLANTA, GEORGIA
DEPARTMENT OF WATERSHED MANAGEMENT

Rain gardens are small, landscaped depressions that are filled with a mix of native soil and compost, and are planted with trees, shrubs and other garden-like vegetation. They are designed to temporarily store stormwater runoff from rooftops, driveways, patios and other areas around your home while reducing runoff rates and pollutant loads in your local watershed. A rain garden can be a beautiful and functional addition to your landscape.

Location

- Rain gardens should be located to receive the maximum amount of stormwater runoff from impervious surfaces, and where downspouts or driveway runoff can enter garden flowing away from the home.
- Swales, berms, or downspout extensions may be helpful to route runoff to the rain garden.
- Locate at least 10 feet from foundations, not within the public right of way, away from utility lines, not over septic fields, and not near a steep bluff edge. Call 811 before you dig to locate the utility lines on your property.
- Rain gardens on steep slopes (>10%) may require an alternative design with terracing.

Design

- The size of the rain garden will vary depending on the impervious surface draining to it and the depth of the amended soils. Use the table to determine the required surface area.
- A maximum ponding depth of 6 inches is allowed within rain gardens. On average, rain gardens drain within a day which will not create a mosquito problem.
- Design rain garden entrance to immediately intercept inflow and reduce its velocity with stones, dense hardy vegetation or by other means.
- If sides are to be mowed rain gardens should be designed with side slopes of 3:1 (H:V) or flatter.

Contributing Drainage Area (square feet)	Depth of Amended Soil (inches)			
	18	24	30	36
	Area of Rain Garden (square feet)			
100	6.6	5.7	5.1	4.6
500	35	30	25	23
1000	65	60	50	45
2000	135	115	100	90
3000	200	170	150	140
4000	260	230	200	185
5000	330	290	255	230

- For best results, it is suggested to test your soil characteristics as you would for a garden, or contact your local County Extension Service for help www.caes.uga.edu/extension/fulton.
- Soils for rain gardens should be amended native soils containing: 2/3 native soils and 1/3 compost.

- A mulch layer consisting of 2-3 inches of non-floatable organic mulch (fine shredded hardwood mulch, pine straw, or leaf compost) should be included on the surface of the rain garden. Pine bark and wood chips should not be used.
- Often rain gardens have a better appearance and can be more easily maintained if they have defined edges similar to a normal garden.
- The overflow from the rain garden should be non-eroding and can consist of a small berm or even an inlet grate set at the proper elevation in the garden. The grate should be set at a slant or be domed to allow clogging debris to fall off.

Vegetation

- Vegetation commonly planted in rain gardens includes native trees, shrubs and other herbaceous vegetation. When developing a landscaping plan, you should choose vegetation that will be able to stabilize soils and tolerate the stormwater runoff rates and volumes that will pass through the rain garden.
- Vegetation used in rain gardens should also be able to tolerate both wet and dry conditions. See Appendix F of Volume 2 of the Georgia Stormwater Management Manual (ARC, 2001) for a list of grasses and other plants that are appropriate for use in rain gardens in the state of Georgia. Please refer elsewhere within this document for additional information on plants appropriate for rain gardens.
- As with any garden in the first season the vegetation may require irrigation to become well established. It may be appropriate to plant more densely than a normal garden to obtain the benefit of plant soil stabilization and evapotranspiration as soon as possible.

Maintain

Routine garden maintenance should include weeding, deadheading, replacing dead plants, and replenishing mulch when depleted. Catching areas of erosion is also important as is correcting standing water problems. If standing water persists it may be necessary to place a perforated underdrain in the garden daylighting downstream.

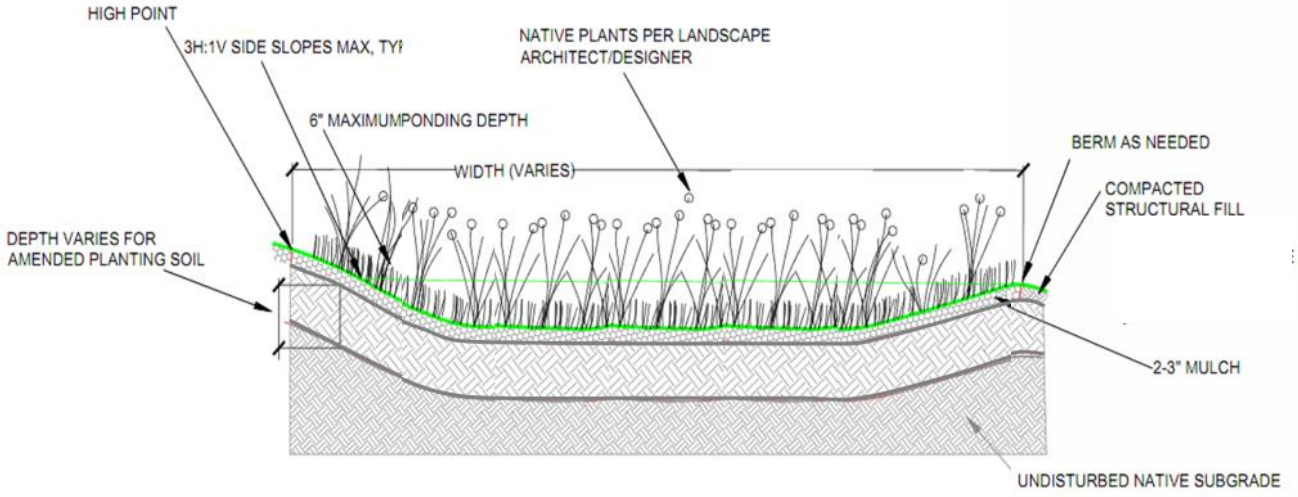

CONSTRUCTION STEPS:

1. Locate rain garden(s) where downspouts or driveway runoff can enter garden flowing away from the home. Locate at least 10 feet from foundations, not within the public right of way, away from utility lines, not over septic fields, and not near a steep bluff edge.
2. Measure the area draining to the planned garden and determine required rain garden surface area from the table on the next page and your planned excavation depth.
3. Optionally, perform infiltration test according to Appendix A. If the rate is less than 0.25 in/hr an underdrain will be necessary. If the rate is more than 0.50 in/hr the size of the garden may be decreased 10% for every 0.50 in/hr infiltration rate increase above 0.50 in/hr.
4. Measure elevations and stake out the garden to the required dimensions insuring positive flow into garden, the overflow elevation allows for six inches of ponding, and the perimeter of the garden is higher than the overflow point. If the garden is on a gentle slope a berm at least two feet wide can be constructed on the downhill side and/or the garden can be dug into the hillside taking greater care for erosion control at the garden inlet(s).
5. Remove turf or other vegetation in the area of the rain garden. Excavate garden being careful not to compact soils in the bottom of the garden. Level bottom of garden as much as possible to maximize infiltration area.
6. Mix compost, topsoil, and some of the excavated subsoil together to make the 'amended soil'. The soil mix should be 1/3 compost, 2/3 native soil (topsoil and subsoil combined).
7. Fill rain garden with the amended soil, leaving the surface eight inches below your highest surrounding surface. Eight inches allows for 6 inches ponding and 2" of mulch. The surface of the rain garden should be as close to level as possible.
8. Build a berm at the downhill edge and sides of the rain garden with the remaining subsoil. The top of the berm needs to be level, and set at the maximum ponding elevation.
9. Plant the rain garden using a selection of plants from elsewhere in this manual.
10. Mulch the surface of the rain garden with two to three inches of non-floating organic mulch. The best choice is finely shredded hardwood mulch. Pinestraw is also an option.
11. Water all plants thoroughly. As in any new garden or flower bed, regular watering will likely be needed to establish plants during the first growing season.
12. During construction build the inlet feature as a pipe directly connected to a downspout or use a rock lined swale with a gentle slope. Use of an impermeable liner under the rocks at the end of the swale near the house is recommended to keep water from soaking in at that point. Test the drainage of water from the source to the garden prior to finishing.
13. Create an overflow at least 10 feet from your property edge and insure it is protected from erosion.

CITY OF ATLANTA DEPARTMENT OF WATERSHED MANAGEMENT	NAME/ADDRESS:	RAIN GARDEN SPECIFICATIONS PAGE 1 OF 2

SKETCH LAYOUT

PROVIDE PLAN VIEWS OF RAIN GARDEN AND HOUSE SHOWING DRAINAGE AREA DIRECTED TO RAIN GARDEN AND KEY DIMENSIONS AND OVERFLOW AREA RELATIVE TO PROPERTY LINE.

SIZING CALCULATION:

Contributing Drainage Area (square feet)	Depth of Amended Soil (inches)			
	18	24	30	36
	Area of Rain Garden (square feet)			
100	6.6	5.7	5.1	4.6
500	35	30	25	23
1000	65	60	50	45
2000	135	115	100	90
3000	200	170	150	140
4000	260	230	200	185
5000	330	290	255	230

MEASURE CONTRIBUTING DRAINAGE AREA AND READ AREA FOR GIVEN MEDIA DEPTH.

CONTRIBUTING DRAINAGE AREA= _____ SQ FT
DEPTH OF SOIL MEDIA= _____ INCHES
AREA OF RAIN GARDEN= _____ SQ FT

MAINTENANCE:

1. IRRIGATE VEGETATION AS NEEDED IN FIRST SEASON
2. REMOVE WEEDS
3. REPLACE UNSUCCESSFUL PLANTINGS
4. REPLENISH MULCH
5. REPAIR ERODED AREAS
6. RAKE CLOGGED SURFACE TO RESTORE INFILTRATION
7. MONITOR RAIN GARDEN FOR APPROPRIATE DRAINAGE TIMES IF GARDEN DOES NOT DRAIN AN UNDERDRAIN MAY BE NECESSARY

APPENDIX A

Testing Infiltration: the Simple Approach

It is assumed that an infiltration rate of 0.25 to 0.50 inches per hour exists on residential sites. The sizing criteria are set for this rate. However, if the soils have a higher infiltration rate the size of the features could be reduced. At the discretion of the property owner the following infiltration test can be conducted, and if it returns a higher infiltration ate than 0.50 inches per hour suitable reductions in the size of the infiltration-based facilities can be made. See each practice for the adjustment procedure.

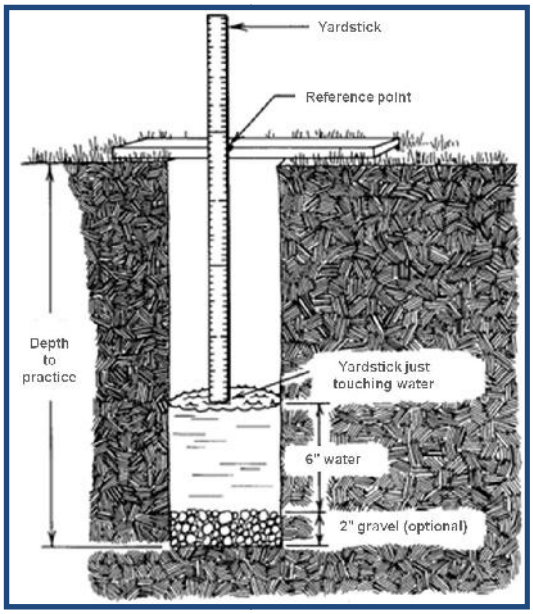

Source: modified from www.ag.ndsu

Infiltration features (rain gardens, dry wells, permeable paver gravel layers) should reliably drain within the recommended time limit. Here is how to test if your soils can handle this type of feature.

1. Locate the approximate center of the area where you expect to build your feature.
2. Dig an access pit down to the bottom of the amended soils or gravel layer in the feature.
3. At that elevation dig a narrow test hole at least eight inches deep. You can optionally place 2" of course gravel in the bottom. The test hole can be excavated with small excavation equipment or by hand using a spade shovel or post-hole digger.
4. If you run into a hard layer that cannot be penetrated with a shovel or, you come across water in the whole, stop. Infiltration features should not be sited over impenetrable rock surfaces or over high water tables, so your site is inappropriate.
5. Place a flat board across the hole to serve as a measuring point (see figure).
6. Fill the hole with water to a depth of six inches. Measure from the flat board to the water surface. Record the exact time you stop filling the hole and the height of the water every 10 minutes for fast draining soils for a minimum of one hour or every 30 minutes for slow draining soils for a minimum of two hours.
7. Refill the hole again and repeat step 5 twice more. The third test will give you the best measure of how quickly your soil absorbs water when it is fully saturated.
8. If on the third test the water is dropping at least ½" per hour the soil will work for the infiltration features.

Source: www.learntogrow.com

APPENDIX B

Recommended Plants

Plants for rain gardens and other vegetated stormwater practices must be able to tolerate both wet and dry conditions. This list, while not exhaustive, includes many plants that will tolerate conditions in rain gardens. The plants in this list do have different preferences for both moisture and light, as shown in the columns labeled 'Moisture' and 'Sun'. Additionally, the majority of these plants are native to Georgia and thus contribute the added benefit of providing habitat and food for native pollinators and wildlife. Those plants that are not native to Georgia are marked with an asterisk (*).

Key

Height: Typical height range for mature plants

Moisture: The amount of soil moisture that plants will tolerate is defined as follows:

W (Wet) —Frequently saturated soils
M (Moist) —Moist soils that are periodically inundated.
D (Dry) — Areas not flooded after rains and frequently dry between rains. Plants designated 'D' will tolerate drought conditions

Sun: the amount of sunlight that plants require is defined as follows:

F (Full) Direct sunlight for at least 6 hours per day
P (Partial shade)—Direct sunlight for 3-6 hours per day, or lightly filtered light all day
S (Shade)—Less than 3 hours of direct sunlight per day, or heavily filtered light all day

	Botanical Name	Common Name	Height	Moisture	Sun
Small Trees	Acer floridanum	Southern Sugar Maple	20'-25'	M	F/P/S
	Amelanchier arboria	Serviceberry	15'-25'	W/M/D	F/P
	Cercis canadensis	Redbud	20'-30'	M	F/P
	Chionanthus virginicus	Fringe Tree	12'-20'	M	F/P
	Cornus florida	Flowering Dogwood	15'-30'	M/D	F/P
	Hamamelis virginiana	Witchhazel	15'-30'	W/M	P/S
	Ilex decidua	Possumhaw	15'-25'	M/D	F/P
	Ilex vomitoria	Yaupon Holly	20'-25'	M/D	F/P
	Lagerstroemia indica *	Crape Myrtle *	15'-50'	M/D	F/P
	Magnolia virgininana	Sweetbay Magnolia	10'-30'	W/M	F/P
	Magnolia x soulangeana *	Saucer Magnolia *	15'-25'	M	F/P
	Vitex agnus-castus *	Chaste Tree *	15'-20'	M/D	F/P

	Botanical Name	Common Name	Height	Moisture	Sun
Med.- Large Trees	Acer rubrum	Red Maple	60'-90'	W/M/D	F/P
	Betula nigra	River Birch	40'-70'	W/M	F/P
	Carpinus caroliniana	Musclewood	30'-50'	W/M	F/P
	Crataegus phaenopyrum	Washington Hawthorne	25'-30'	W/M/D	F/P
	Fraxinux pennsylvanica	Green Ash	50'-70'	W/M/D	F
	Ilex opaca	American Holly	30'-60'	M/D	F/P
	Magnolia grandiflora	Southern Magnolia	40'-80'	M/D	F/P
	Magnolia macrophylla	Bigleaf Magnolia	30'-40'	M	F/P
	Nyssa sylvatica	Black Gum	35'-70'	W/M/D	F/P
	Platanus occidentalis	American Sycamore	75'-100'	W/M	F
	Quecus lyrata	Overcup Oak	35'-50'	M/D	F
	Quercus bicolor	Swamp White Oak	50'-60'	W/M/D	F/P
	Quercus phellos	Willow Oak	60'-80'	W/M/D	F/P
	Salix babylonica *	Weeping Willow *	30'-50'	W/M	F
	Taxodium distichum	Bald Cypress	50'-100'	W/M/D	F/P

* denotes plants not native to Georgia

	Botanical Name	Common Name	Height	Moisture	Sun
Shrubs-Evergreen	Ilex glabra	Inkberry	6'-8'	M	F/P
	Ilex vomitoria nana	Dwarf Yaupon Holly	5'	W/M/D	F/P
	Illicium floridanum	Florida Anise Tree	10'-15'	M	P/S
	Illicium parviflorum	Small Anise Tree	7-10'	M/D	F/P
	Myrica cerifera	Southern Waxmyrtle	10-15'	W/M/D	F/P

	Botanical Name	Common Name	Height	Moisture	Sun
Shrubs- Deciduous	Callicarpa americana	Beautyberry	6'	M/D	F/P
	Cephalanthus occidentalis	Buttonbush	3-10'	W	F
	Clethra alnifolia	Summersweet	5'-10'	W/M/D	F/P
	Cornus amomum	Silky Dogwood	6'-12'	W/M	F/P/S
	Hibiscus moscheutos	Swamp Mallow	4'-8'	W/M	F/P
	Hypericum densiflorum	Bushy St Johns wort	4-6'	M/D	F/P
	Ilex verticillata	Winterberry	6'-10	W/M	F/P
	Itea virginica	Virginia Sweetspire	4'	W/M/D	F/P
	Lindera benzoin	Spicebush	6-12'	W/M/D	F/P
	Sambucus canadensis	Elderberry	6-'15'	W/M	F/P
	Viburnum acerifolium	Mapleleaf viburnum	3'-6'	M/D	M/S
	Viburnum dentatum	Arrowwood	5'-10'	W/M/D	F/P
	Viburnum nudum	Possumhaw	6'-12'	W/M/D	F/P/S

	Botanical Name	Common Name	Height	Moisture	Sun
Grasses and Allies	Acorus calamus	Sweet Flag	2'-4'	W/M	F/P/S
	Carex spp	Sedges	up to 3'	varies	varies
	Chasmanthium latifolium	River Oats	3'-5'	W/M/D	F/P/S
	Juncus effusis	Soft Rush	1'-4'	W/M	F/P/S
	Juncus tenuis	Path Rush	under 12"	W/M	F/P/S
	Liriope muscari *	Monkey Grass *	18"-24"	M/D	F/P/S
	Muhlenbergia capillaris	Pink Muhly Grass	3'-4'	M/D	F/P/S
	Ophiopogon japonicus *	Mondo Grass *	under 12"	M/D	F/P/S
	Panicum virgatum	Switchgrass	2'-9'	W/M/D	F/P/S
	Schizachyrium scoparium	Little Bluestem	2'-4'	W/M/D	F/P/S
	Sorghastrum nutans	Indiangrass	4'-8'	M/D	F/P/S

	Botanical Name	Common Name	Height	Moisture	Sun
Herbaceous Perennials	Amsonia hubrechtii	Narrow Leaf Blue Star	2'-3'	M/D	F/P
	Asclepias tuberosa	Butterflyweed	1'-3'	M/D	F/P
	Chrysogonum virginianum	Green and Gold	6"	M/D	P/S
	Coreopsis verticillata	Threadleaf Coreopsis	8"-20"	M/D	F/P
	Echinacea purpurea	Purple Cone Flower	1'-3'	M/D	F/P
	Eupatorium fistulosum	Joe Pye Weed	2'-7'	W/M/D	F/P
	Hemerocallis spp. *	Daylily *	1-3'	M/D	F/P
	Iris sibirica *	Siberian Iris *	1'-3'	W/M/D	F/P
	Iris virginica	Blue Flag Iris	12"-24"	W/M	F/P
	Lobelia cardinalis	Cardinal Flower	2'-4'	W/M	F/P
	Monarda didyma	Beebalm	2'-4'	W/M	F/P
	Osmunda cinnamomea	Cinnamon Fern	up to 4'	W/M	F/P/S
	Osmunda spectabilis	American Royal fern	2'-5'	W/M	P/S
	Phlox divaricata	Woodland Phlox	12"-18"	M	P/S
	Phlox stolonifera	Creeping Phlox	6"-12"	M/D	F/P/S
	Polystichum acrostichoides	Christmas Fern	1'-3'	M/D	P/S
	Rudbeckia fulgida	Orange Coneflower	18"-36"	M/D	F/P
	Rudbeckia hirta	Black-Eyed Susan	12"-36"	M/D	F/P
	Solidago spp.	Goldenrod	1-4'	W/M/D	F/P
	Tiarella cordifolia	Foamflower	6"-12"	M	P/S

* denotes plants not native to Georgia

Green Infrastructure Stormwater Management Practices for Small Commercial Development

CITY OF ATLANTA STORMWATER GUIDELINES

Prepared for

CITY OF ATLANTA, GEORGIA

DEPARTMENT OF WATERSHED MANAGEMENT

APRIL 2014

Prepared by

AMEC Environment & Infrastructure

`

Contents

1. Introduction and Approach....1
   - Background and Purpose 1
   - What are Small Commercial Green Infrastructure Practices? 1
   - The Challenges of Applying GI Practices on Small Commercial Sites 2

2. Overview of the Manual....4

3. Small Commercial Development Stormwater Management Procedures and Requirements....5
   - General Requirements 5
   - Applicability 5
   - Stormwater Concept Plan.... 6

4. Concept Plan Development....8
   - Concept Plan Step 1: Identify Site Constraints and Opportunities.... 8
   - Concept Plan Step 2: Appropriate Selection and Application of GI Practices.... 8
   - Concept Plan Step 3: Prepare Conceptual Site Layout Incorporating GI Practices....10
   - Concept Plan Step 4: Schedule and Attend Stormwater Concept Plan and Consultation Meeting 12

5. Design Process 13
   - Standardized Design Criteria for 1 Inch RRv Capture on Small Commercial Sites 13
   - Credits and Incentives 13
   - Stormwater Design Step 1: Determine RRv Required for 1-Inch Rainfall Event....13
   - Stormwater Design Step 2: Identify and Select Combination of GI Practices....14
   - Stormwater Design Step 3: Size Selected GI Practice to Meet RRv Required....14
   - Stormwater Design Step 4: Calculate RRv Provided 15
   - Stormwater Design Step 5: Prepare Runoff Reduction Supplemental Design (if necessary) 15
   - Stormwater Design Step 6: Develop a Landscape Plan....15

6. Plan Submittal Process 16

7. Green Infrastructure Practice Design Guidelines 17
   - Bioretention
   - Infiltration Trenches
   - Bioswales
   - Permeable Pavement
   - Stormwater Planters
   - Subsurface Infiltration
   - Rainwater Harvesting/Cisterns
   - Green Roofs

Tables

Table 1. Green Infrastructure on Small Commercial Sites: Challenges and Solutions 3
Table 2. Appropriate GI Practice Selection by Contributing Drainage Area 9

Figures

Figure 1. Traditional and GI Practices 2
Figure 2. Small Commercial Development Plan Design and Submittal Process 7
Figure 3. GI Practice Selection Pyramid 11
Figure 4. Example Concept Plan 11
Figure 5. RRv Required (in cubic feet) for 1 Inch of Rainfall for Small Commercial Sites in Atlanta 14

Appendixes

Appendix A GI Practice Sizing Example
Appendix B Supplemental Green Infrastructure Practice Details
Appendix C Infiltration Testing Parameters
Appendix D Planting List and Example Planting Plans
Appendix E Sample Forms

LIST OF ACRONYMS AND ABBREVIATIONS

Acronym/ Abbreviation	Definition
ADA	Americans with Disabilities Act of 1990
BMP	Best Management Practice
Blue Book	Georgia Stormwater Management Manual Volume 2
CSS	Coastal Stormwater Supplement
GI	Green Infrastructure
ROW	right-of-way
RRv	Runoff Reduction Volume: the volume of runoff generated by the first 1 inch of rainfall
TSS	total suspended solids

1. INTRODUCTION AND APPROACH

Background and Purpose

Land development permanently alters the way in which stormwater flows across a site due to grading, soil compaction, and the installation of impervious cover. Post-development stormwater runoff quantity and quality can adversely affect public safety, public and private property value and usability, drinking water supplies, recreation, fish and other aquatic life, and other uses of lands and waters.

In order to mitigate these impacts, the City of Atlanta requires, in accordance with Chapter 74, Article X, Post-Development Stormwater Management, that stormwater management measures be utilized on commercial sites for:

- New development that involves creation of any impervious cover
- Redevelopment that includes the creation, addition, or demolition and replacement of 500 square feet or more of impervious cover
- Demolition that leaves in place more than 500 square feet of impervious cover within the area of demolition

Reducing runoff and mimicking pre-development hydrology are two of the primary goals of a sustainable stormwater management program. Managing individual, small storm events on small commercial sites can help capture “first flush” pollutants and provide opportunities for reducing runoff volume.

The Post-Development Stormwater Management Ordinance adds a Runoff Reduction requirement that promotes the use of Green Infrastructure (GI). The term “Runoff Reduction” means the interception, evapotranspiration, infiltration, or capture and reuse of stormwater runoff. In the City of Atlanta, the stormwater management system must be designed to reduce the volume of runoff generated by the first 1 inch of rainfall through the use of GI Practices. This volume must be retained on site and is not allowed to run off.

To achieve these goals, the City of Atlanta requires stormwater management on small commercial development and redevelopment properties, by including stormwater Better Site Design practices, protecting natural areas and green space, reducing impervious cover, and leveraging existing natural features for stormwater management use.

The City acknowledges that comprehensive GI stormwater design on small commercial sites can be challenging. This document presents guidelines for selecting and installing the appropriate GI stormwater management measures when developing or redeveloping a small commercial site that will create or replace more than 500 square feet, but less than 5,000 square feet, of impervious surface.

What are Small Commercial Green Infrastructure Practices?

GI is an alternative approach to managing stormwater runoff that emphasizes infiltration, evapo-transpiration (uptake of water by plants and evaporation), and reuse. The goal of GI is to better mimic the natural hydrologic function of the watershed. GI Practices can provide water quality filtering, storage, and infiltration solutions for smaller, more frequent storm events (1 inch or less). For larger projects that add more than 5,000 square feet of impervious cover, additional stormwater management measures for flood control are required to handle more significant rain events and address peak runoff volumes and flooding mitigation.

Small commercial GI site design distributes appropriate GI Practices such as bioretention, infiltration trenches, bioswales, permeable pavement, stormwater planters, subsurface infiltration, rainwater harvesting/cisterns, and green roofs into the site landscape and infrastructure and interconnects them to address the required Runoff Reduction volume. Figure 1 shows a comparison of traditional and GI stormwater practices at a small commercial site.

Figure 1. Traditional and GI Practices

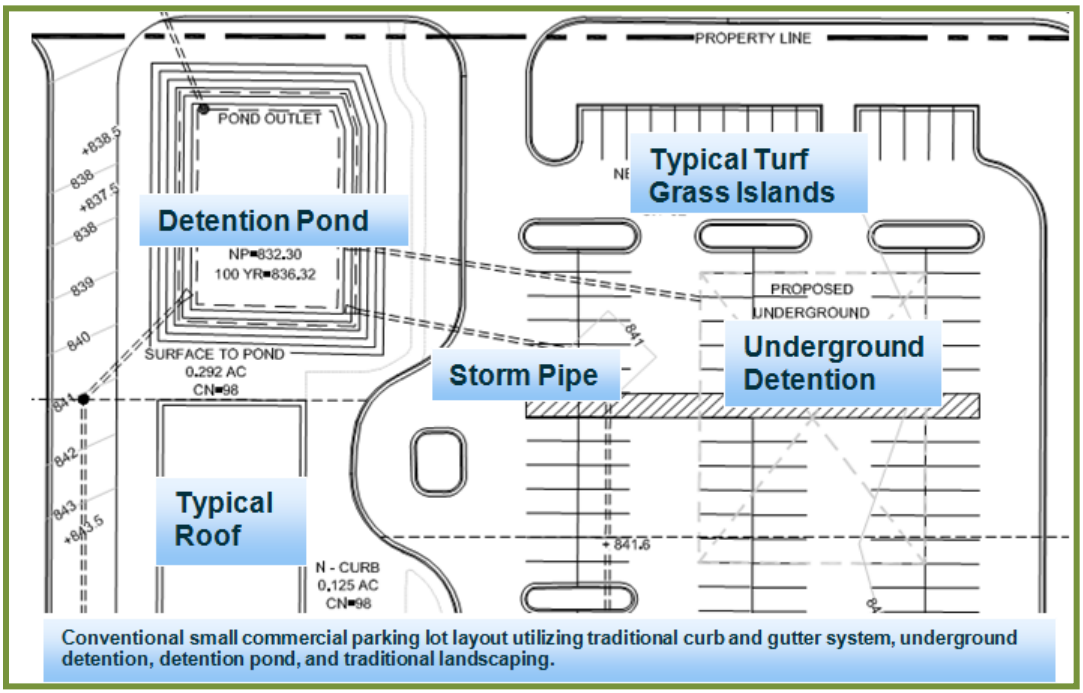

Conventional small commercial parking lot layout utilizing traditional curb and gutter system, underground detention, detention pond, and traditional landscaping.

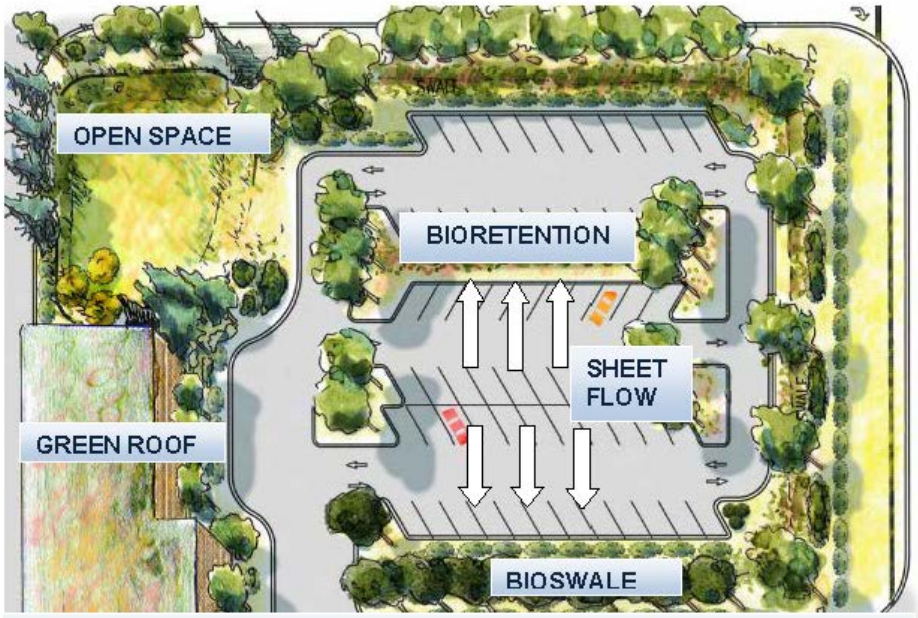

By using integrated stormwater management and green infrastructure practices the designer is able to eliminate the need for the underground storage vault and detention pond, thus having more developable space.

The Challenges of Applying GI Practices on Small Commercial Sites

Small commercial sites present unique development challenges. Incorporating GI Practices necessitates innovative solutions as noted in Table 1.

Table 1. Green Infrastructure on Small Commercial Sites: Challenges and Solutions

Challenge	*Solution*
✓ GI can compete for space with a variety of existing utilities and infrastructure.	✓ Be creative with the site layout by incorporating GI within site landscape and parking. Utility-specific horizontal and vertical setbacks should be met. ✓ When encroachment is unavoidable, additional protection or encasement of the utility or protection of the infrastructure may be warranted. Construction sequencing should be planned to minimize disruption of utility service.
Challenge	*Solution*
✓ Urban soils are often highly compacted and nutrient-deficient, and limit the growth of plants and infiltration of stormwater.	✓ Many GI Practices are required to include a specified soil mix and integrate an underdrain system. Soil amendments can also be added to the in situ soils if deemed necessary. ✓ Soil can be tilled or excavated if more favorable conditions are identified deeper within the soil profile.
Challenge	*Solution*
✓ Concentrated runoff and potentially high sediment loads can be expected in ultra-urban environments.	✓ It is important for the design to incorporate energy dissipation and pre-treatment practices that will capture/collect sediment to prevent clogging. ✓ Highly tolerant and hardy plants should be selected. ✓ Routine maintenance must be specified and provided.
Challenge	*Solution*
✓ Highly polluted runoff from urban sites may infiltrate into subsoils.	✓ Specify a lined stormwater planter, bioretention, green roofs, and/or rainwater harvesting, which rely on evapotranspiration and reuse rather than infiltration. ✓ Segregate the most polluted runoff and treat with special practices—both structural and nonstructural (for example, special drains and spill cleanup practices).
Challenge	*Solution*
✓ Small commercial sites will be limited in space to meet multiple zoning, landscape, parking, and stormwater requirements.	✓ Bioretention areas in parking lots can typically deliver required stormwater management and use plants that meet the 10% tree planting and landscaping requirement in accordance with the City's Tree Ordinance (Sec. 158-30). ✓ Permeable pavement can function both as a parking area and a stormwater management facility, offering a space-saving solution on expensive real estate.
Challenge	*Solution*
✓ Urban GI is often subject to higher public visibility, greater trash loads, pedestrian use, vandalism, and vehicular loads.	✓ To address public visibility, a routine maintenance plan is required to keep GI Practices free of trash and debris. ✓ Signage is also recommended for GI Practices to educate and increase public awareness. ✓ Low-stature plants and a more formalized planting plan can be used to blend practices into surrounding landscapes. ✓ Low fences, grates, or other measures can be installed to prevent damage from traffic and pedestrians.
Challenge	*Solution*
✓ GI stormwater practices are perceived to be more expensive than traditional stormwater practices.	✓ GI Practices can cost less to install and maintain than traditional stormwater practices. For example, cisterns can reduce the need for irrigation and even potable water. Native drought-tolerant plants can also eliminate the use of potable water and fertilizers. Often, less storm pipe, curb, and gutter are needed in design.
Challenge	*Solution*
✓ Changing regulations require creative methods to reduce the volume of runoff leaving the site.	✓ This manual was created to help simplify and streamline the design process and take the uncertainty out of the design.

2. OVERVIEW OF THE MANUAL

This *Small Commercial Green Infrastructure Practices Manual* presents simplified design standards more applicable to urban infill commercial sites, allowing greater flexibility in meeting design requirements without the necessity for complex engineering calculations and analysis. Sites designed to meet the guidelines in this document are not required to provide additional stormwater detention. Once the required 1 inch of Runoff Reduction Volume (RRv) is met, no additional storage is required for stream channel or flood protection; thus, this document does not address stormwater detention storage.

This guideline is meant to complement the use of the *Georgia Stormwater Management Manual Volume 2* (Blue Book) and the *Coastal Stormwater Supplement* (CSS). The CSS may be used to design GI in lieu of this document, but must be used for sites that propose more than 5,000 square feet of impervious area. The CSS describes a set of runoff reduction credits that can be applied to appropriate site design conditions. These credits may be challenging to achieve for small commercial sites covered by this document. In cases where such credit approaches could apply, they will be allowed in accordance with guidance contained in the CSS.

A. Which types of small commercial projects does this manual address?

- Existing developments proposing additions or redevelopment creating or replacing more than 500 square feet but less than 5,000 square feet of impervious surface
- New development that creates less than 5,000 square feet of impervious surface
- Demolition that leaves in place between 500 and 5,000 square feet of impervious cover within the area of demolition

B. Manual requirements relevant to the Post-Development Stormwater Management Ordinance:

- Requires capture and retention of the first 1 inch of stormwater runoff (RRv) from the added and/or replaced impervious surface through GI Practices including infiltration, evapotranspiration, or reuse on site
- Redevelopment sites meeting the small commercial definition and achieving 1 inch RRv capture are not required to provide additional detention storage
- Stormwater Concept Plan and consultation meeting are required early in the design process to discuss stormwater management requirements and to identify potential GI Practices
- Allows use of previous Water Quality standard (80% total suspended solids [TSS] removal) under extreme circumstances that preclude runoff reduction with appropriate documentation
- Requires Inspections and Maintenance Agreement to ensure successful long-term performance
- Calls for certification from the plan designer that GI Practice was constructed as designed

C. The manual contains:

- A summary of the Post-Development Stormwater Management Ordinance procedures and requirements (Section 3)
- A flowchart (Figure 2) illustrating the small commercial stormwater design and submittal process
- Guidance for laying out a site incorporating GI Practices (Section 4)
- Standardized RRv for small commercial sites (Figure 5)
- Design Guidelines and typical details for eight GI Practices (Section 7)
- GI Practice sizing example and representative depictions (Appendix A)
- Infiltration testing parameters (Appendix C)
- Planting Guide and example landscape/planting plans (Appendix D)

3. SMALL COMMERCIAL DEVELOPMENT STORMWATER MANAGEMENT PROCEDURES AND REQUIREMENTS

General Requirements

The Small Commercial Development GI Practices submittal path allows flexibility within the overall context of the Post-development Stormwater Management Ordinance as outlined herein. In addition, the stormwater management site plan must comply with zoning setbacks, the tree ordinance, and all other site development requirements. Figure 2 shows the overall development plan approval process for small commercial sites. Contact the Office of Buildings at 404-330-6150 for additional information on plan submittals.

Applicability

Establish: (1) if the site is exempt from stormwater requirements, (2) if this Small Commercial Development Manual applies, or (3) if a full design submittal must be prepared following the Blue Book and the CSS.

A. Activities that are exempt from Section 74-504 (d) include:

- New development with no impervious cover disturbing less than 1 acre
- Redevelopment impacting or creating less than 500 square feet of impervious cover
- Properly zoned agricultural land management activities resulting in less than 1,000 square feet of impervious cover
- Re-grading of athletic fields or public parks resulting in less than 1,000 square feet of impervious cover
- Drainage or sanitary sewer facility installations, repairs, or modifications
- Utility work
- Dumpster pad impervious surface connected to a sanitary sewer
- Installations or modifications to existing structures to accommodate Americans with Disabilities Act of 1990 (ADA), health and safety, or City of Atlanta code requirements
- Incidental mechanical or electrical installations on existing impervious surface
- Installation of hardscape of less than 5,000 square feet utilizing pervious pavement or appropriate infiltration
- Maintenance or repair of existing impervious surface less than 1,000 square feet
- Overlays or resurfacing of existing impervious surface
- Public right-of-way (ROW) work or projects on private property necessitated by activities in the ROW
- Sidewalks or trails 15 feet wide or less where runoff is directed via sheet flow toward vegetated areas at least twice as wide as the paved area, provided that the potential for erosion is adequately addressed
- Minor work deemed in the best interest of the City of Atlanta
- Stream bank stabilization or restoration activities, or activities solely for the purpose of environmental remediation
- Replacement of driveway access to a single-family residential development

B. This manual should be used for:

- Existing developments proposing additions or redevelopment impacting or creating more than 500 square feet, but less than 5,000 square feet, of impervious surface
- New development that creates less than 5,000 square feet of impervious surface
- Demolition that leaves in place more than 500 square feet of impervious surface within the area of demolition

C. Full design submittal is required for:

- Sites that propose more than 5,000 square feet of impervious area

Stormwater Concept Plan

Develop a stormwater concept plan utilizing better site planning techniques and GI Practices to achieve the RRv goal. Steps followed in the design process include identifying site constraints and opportunities, selecting appropriate GI Practices for site conditions, and preparing a well-thought-out concept plan incorporating GI Practices. A full design example is provided in Appendix A.

Figure 2. Small Commercial Development Plan Design and Submittal Process

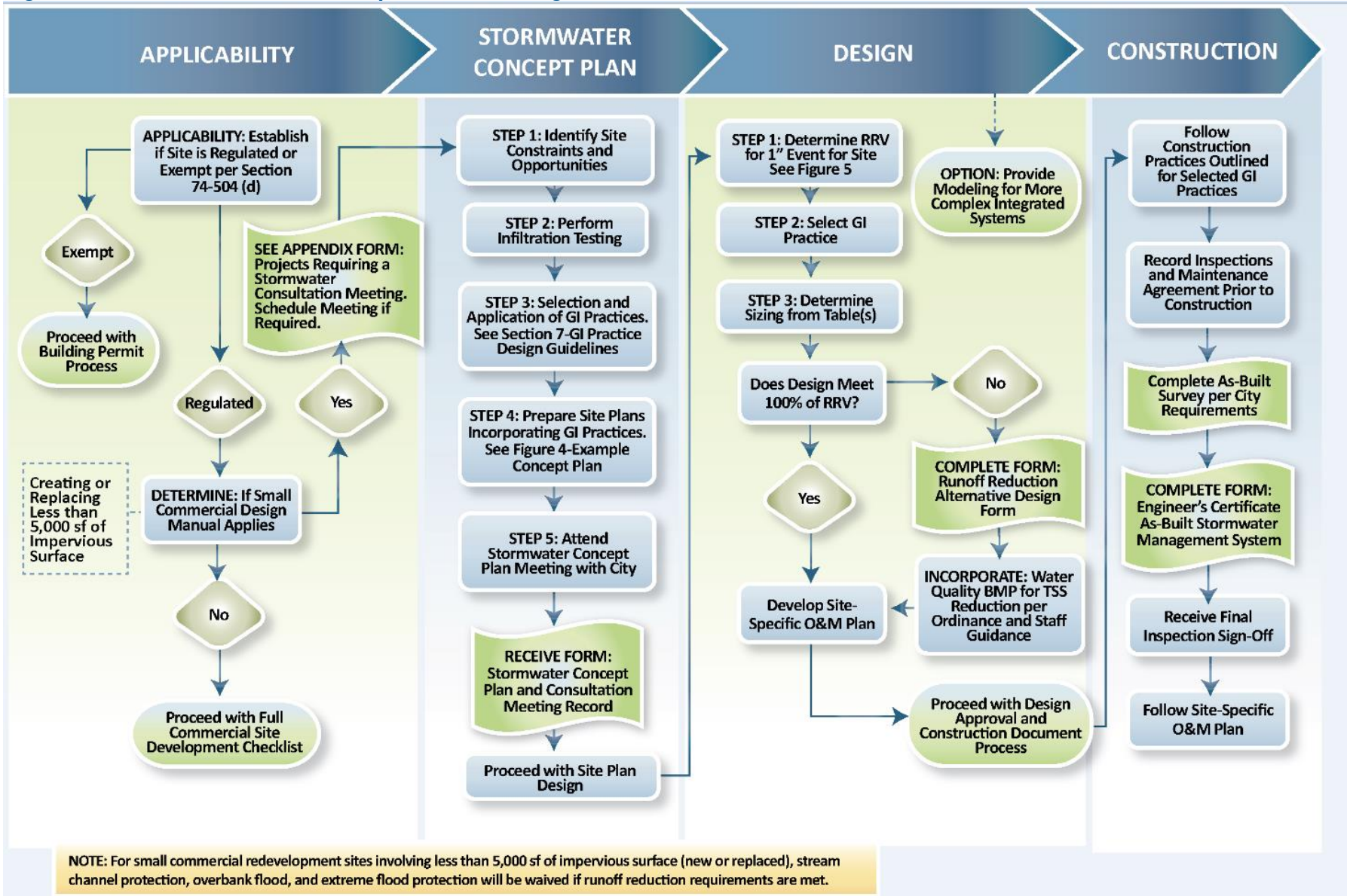

4. CONCEPT PLAN DEVELOPMENT

Concept Plan Step 1: Identify Site Constraints and Opportunities

Review the existing site to identify constraints and opportunities for GI Practices to meet the RRv.

Constraints Include:

- Existing conditions: soils, impervious area, slopes, stream buffers, building and site elements to remain
- Utilities, easements, site and zoning constraints
- Existing drainage patterns to and through the site, downstream outlet location and capacity
- Tree recompense and critical root zones (tree ordinance)
- Parking requirements
- Site infiltration rates per infiltration testing parameters in Appendix C

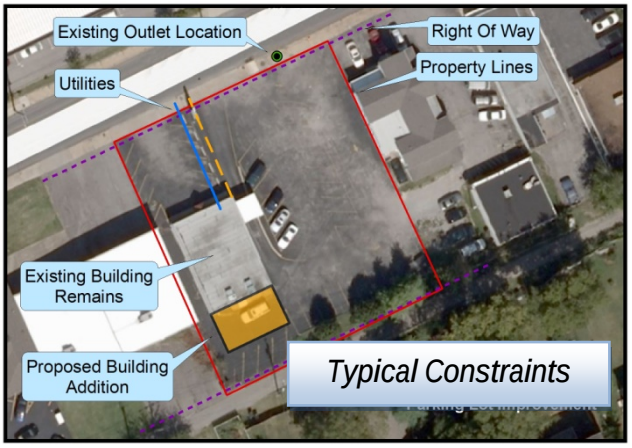

Opportunities Include:

- Modification of existing on-site elements such as landscape islands to function as GI Practices
- Existing pervious or impervious areas on site that can be restored or retrofitted
- Potential stormwater management locations/ opportunities
- Prospective GI Practices to be utilized
- Treat an equivalent area of existing paved surface runoff in lieu of new impervious surface if drainage patterns allow

Concept Plan Step 2: Appropriate Selection and Application of GI Practices

Table 2 lists potential selection and application of GI Practices appropriate for small commercial sites. In this step, the designer determines a preliminary layout of the GI Practices necessary to handle the 1-inch RRv capture requirement. In each case, the requirements for the practice, the preliminary volume needs, and other details are considered in an iterative process.

Contributing Drainage Areas

Although the simplified design standards employed in this manual require management of 1 inch of rainfall from the added and/or replaced impervious surface only, it is probable that additional surface area will drain to the GI Practices. GI Practice performance can be greatly affected by the conditions and size of the contributing drainage area, and must be sized appropriately to accept and treat the contributing runoff. When this situation occurs, additional runoff or even adjacent “run-on” should be diverted away from the practice to help ensure appropriate functionality and long-term success.

Not all GI Practices are suitable to accept runoff from all types of surfaces. See Table 2 for a summary of acceptable conditions. Recommended drainage area size and specific ratios are addressed for each practice in the individual GI Practice Design Guidelines found in Section 7, Green Infrastructure Practice Design Guidelines, of this document.

As a rule of thumb, capture of the runoff from a 1-inch rainfall requires approximately 8 cubic feet of storage per 100 square feet of contributing impervious drainage area.

Pre-Treatment

Each of the GI Practices requires some form of pre-treatment to prevent sediment, non-stormwater pollutants, and trash from entering and/or clogging the system. The main goal of pre-treatment is to capture floatables, debris, grease, oils, silt, and sediment where they can be easily cleaned through regular maintenance, and before they can clog the system or pass underground. Some GI Practices noted in Table 2 include pre-treatment filtering as part of the design, while others require additional measures. If additional measures are warranted, proprietary mechanical GI Practices such as inlet sumps or catch basin inserts can be employed upstream of the GI Practice to protect the long-term performance of the practice. These require additional cost and long-term maintenance considerations.

Table 2. Appropriate GI Practice Selection by Contributing Drainage Area

GI Practice	Surface Type of Contributing Area					Design Incorporates Pre -Treatment	Practice Requires Pre-Treatment	Recommended Size of GI Practice Based on Contributing Area *
	Pavement	Roof	Grass / Stabilized Landscape	Dumpster Pad	Loose Gravel or Exposed Soil (High Sediment Potential)**			
Bioretention	✓	✓	✓	✓		✓		5% to 10% of Contributing Area
Infiltration Trenches	✓	✓	✓	✓			✓	5% of Contributing Area
Bioswales	✓	✓	✓	✓		✓		5% of Contributing Area
Permeable Pavement	✓	✓				✓		25% of Contributing Area
Stormwater Planter	✓	✓	✓			✓		5% of Contributing Area
Subsurface Infiltration	✓	✓	✓				✓	5% to 10% of Contributing Area
Rainwater Harvesting	✓	✓	✓				✓	No Restriction
Green Roof		✓				✓		100% of Contributing Area

* *Recommended size assumes suitable soil conditions (Type C Soils or better) and typical design soil and gravel cross section depths for each GI Practice. With appropriate conditions, practices can be sized to handle greater contributing areas, or a combination of practices can be employed to address larger contributing areas.*

** *All loose gravel or exposed soil contributing areas require appropriate pre-treatment practices.*

Concept Plan Step 3: Prepare Conceptual Site Layout Incorporating GI Practices

Preparing a conceptual plan that incorporates GI Practices requires a change from the traditional stormwater design process of collect, convey, store, and release. The following steps supply guidance for evaluating a site. Figure 3 shows potential GI Practices, and Figure 4 shows an example of a GI Practice concept plan for a small commercial site.

1. Divert offsite drainage around the perimeter of the site or safely through the site to the maximum extent practical.
2. Identify opportunities for Better Site Planning and Design Practices as defined in Chapter 7 of the CSS, emphasizing design that minimizes disturbance to existing trees where practical.
3. Make full use of the site, integrating GI elements into landscaping areas, buffers, walkways, and parking lots while adequately addressing appropriate protection of utilities and utility trenches from the influence of storage inundation.
4. Use a combination of recognized GI Practice types including soil restoration, downspout disconnection, and filter strips to intercept runoff near its source and provide filtering and infiltration.
5. Eliminate storm pipes, manholes, and inlet structures in favor of interconnected bioretention cells, curb turnouts, and permeable pavement where practical to provide collection, conveyance, and pre-treatment.
6. Provide distributed storage and conveyance using bioswales in combination with appropriately graded subsurface stone media or chamber reservoirs and underdrains.
7. Incorporate multiple routes for runoff to get into the integrated stormwater system and/or backup routing when possible (for example, use both permeable pavement and curb turnouts to transport stormwater to a yard inlet).
8. Avoid designs that place GI Practices at the bottom of dry detention ponds that provide volumetric storage and may compromise the performance when inundated.
9. Reduce outflow volume, designing GI Practices to maximize evapotranspiration near the surface and infiltration in suitable soils.
10. Provide overflow energy dissipation or bypass routing for runoff from storm events beyond design sizing to avoid the potential for the GI Practice to be washed out.
11. Provide overflow connection to the existing drainage system, confirming that discharge does not create adverse impacts downstream and that overflow routing has been provided.

Figure 3. GI Practice Selection Pyramid

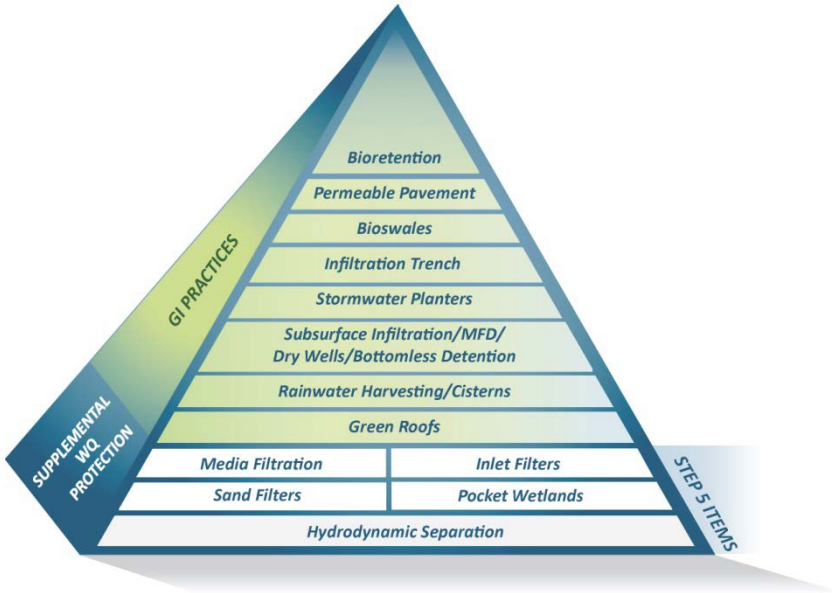

Figure 4. Example Concept Plan

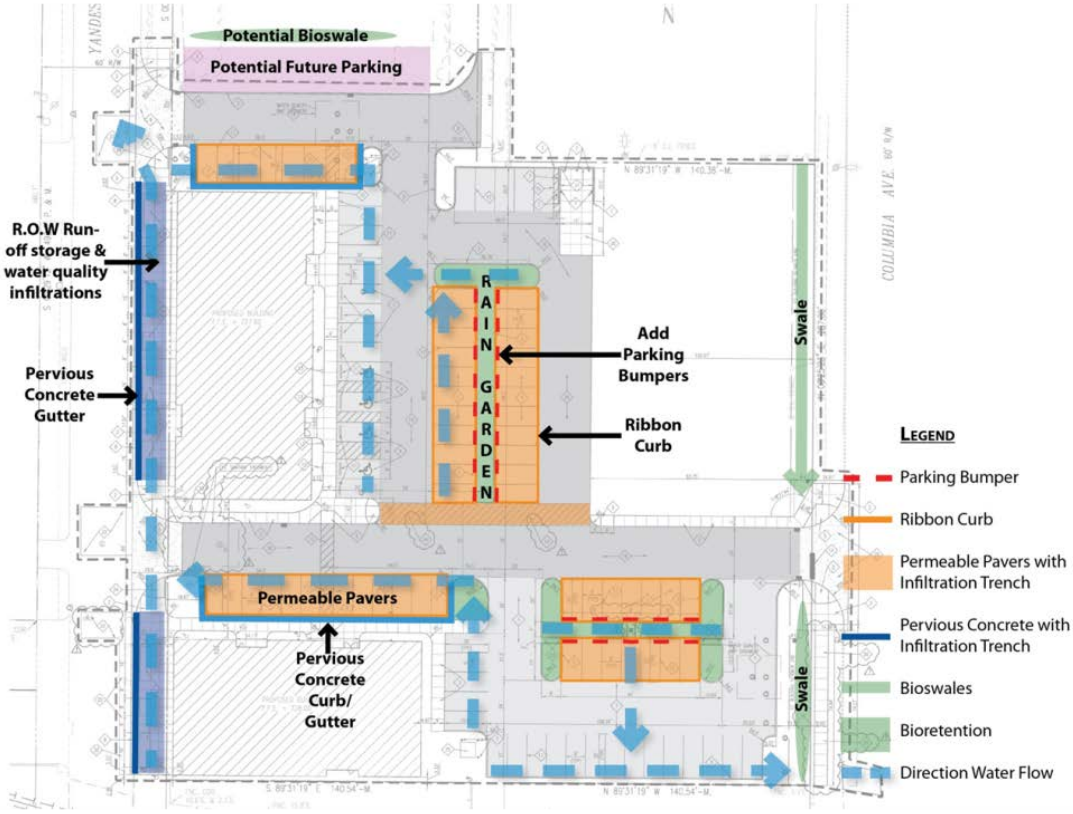

Concept Plan Step 4: Schedule and Attend Stormwater Concept Plan and Consultation Meeting

It is highly recommended to schedule the stormwater consultation meeting prior to rezoning or planning approval; however, this meeting must take place prior to the submittal of a building or land disturbance permit application. Contact the Site Development office, 404-330-6249, to schedule a meeting time. A copy of the Stormwater Concept Plan and Consultation Meeting Record form has been provided in Appendix E.

Submittal Requirements

Required Concept Plan submittal information includes:

- Existing conditions
- Proposed limits of clearing and proposed impervious surfaces
- Soil infiltration rate information from soil surveys, on-site soils analysis, or infiltration test—infiltration testing is required for previously developed or graded sites or sites with urban soil types
- Natural Resources Inventory
- Stormwater management concept narrative that identifies Better Site Design Practices and Techniques in accordance with Chapter 7 of the CSS
    - Conservation of natural resources and features
    - Lower-impact site design techniques
    - Reduction of impervious cover
    - Use of natural features for stormwater management
    - Use of integrated GI Practices
- Conceptual Site Plan

5. DESIGN PROCESS

Standardized Design Criteria for 1 Inch RRv Capture on Small Commercial Sites

The Post-Development Stormwater Management Ordinance requires that stormwater management systems be designed to capture the volume of runoff generated by the first 1 inch of rainfall through the use of GI Practices. This volume, the RRv, must be retained on-site and is not allowed to run off.

RRv is calculated using the following formula from Section 5.2 of the CSS:

$$RRv = [(P)(Rv)(A)] / 12$$

Where:

RRv	=	runoff reduction volume (acre-feet)
P	=	target runoff reduction rainfall (inches)
Rv	=	volumetric runoff coefficient = 0.05+0.009(I)
A	=	site area (acres)
12	=	unit conversion factor (inches/foot)

Where:

I	=	site imperviousness (%)

For small commercial sites, the RRv requirement has been simplified to pertain only to the 1 inch of rainfall from the added and/or replaced impervious surface. It does not require consideration of runoff from the overall site. This simplification applies only to small commercial sites creating, adding, and/or demolishing and replacing between 500 and 5,000 square feet of impervious surface. Note that this is not simply a net addition of impervious surface; rather, it can include impact to existing imperviousness.

Applicants have the choice to meet this requirement by following the practices in this document, or by using the Blue Book and the CSS to design an appropriate stormwater management plan. Applicants are strongly encouraged to utilize Better Site Design techniques outlined in Section 6 of the CSS to address overall site conditions. When placing and sizing GI Practices, the designer must consider the total impervious area draining to the practice to ensure appropriate functionality and long-term success.

Credits and Incentives

Stormwater credits consist of the built-in benefits of using Better Site Design and GI Practices. Because these practices both clean and reduce the volume of runoff, quantifiable credit is given to satisfy the RRv. Based on the GI Practice and the soil type, a specific volume reduction capacity is assigned to each GI Practice. The GI Practice Design Guidelines in Section 7 include specific sizing information based upon the credits.

Stormwater Design Step 1: Determine RRv Required for 1-Inch Rainfall Event

The amount of volume to be reduced on-site is directly related to the impervious surface added or impacted.

A. Calculate created, added, and/or demolished and replaced impervious surface area from proposed design plans.
B. If the applicable impervious surface is less than 500 square feet or exceeds 5,000 square feet, this manual does not apply; instead, a full design submittal must be prepared following the Blue Book and the CSS.
C. Identify the RRv Required from Figure 5 using the calculated impervious surface area.

D. If the impervious area draining to the GI Practice exceeds 5,000 square feet, or if a more detailed result is desired, the RRv Required can be calculated by using the following formula:

Area of contributing impervious surface × 0.08

Figure 5. RRv Required (in cubic feet) for 1 Inch of Rainfall for Small Commercial Sites in Atlanta

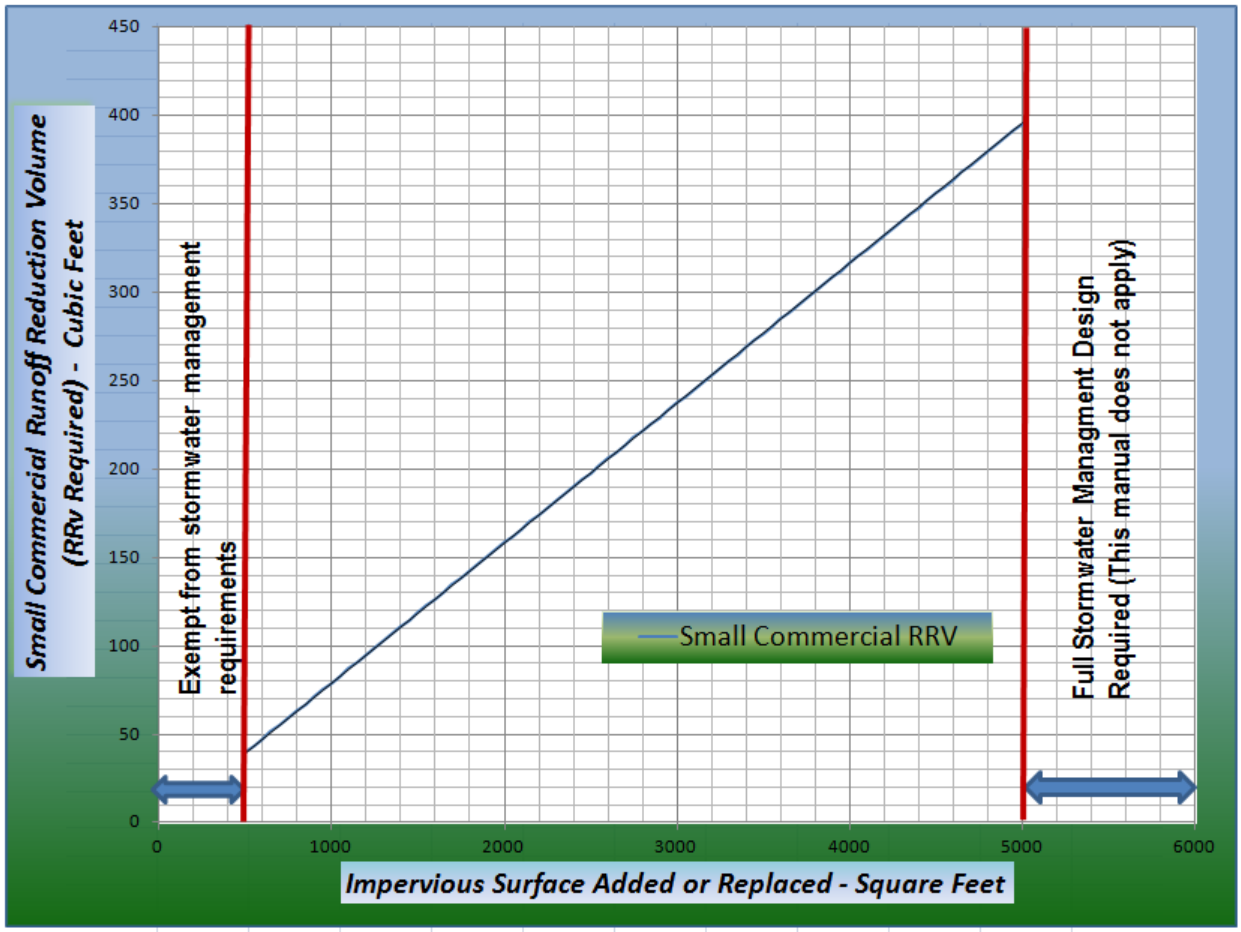

Stormwater Design Step 2: Identify and Select Combination of GI Practices

Select a combination of GI Practices that:

A. Meet the intent and locations of practices proposed at the Stormwater Concept Plan Meeting
B. In combination, can meet RRv Required storage requirements based on Figure 5, GI Practice sizing tables, and any allowable volume reduction credits
C. Stay within the contributing drainage area limits from Table 2

Stormwater Design Step 3: Size Selected GI Practice to Meet RRv Required

A. Finalize the design layout and GI Practice geometries (in Section 7, Green Infrastructure Practice Design Guidelines) that can be used in meeting RRv Required from concept plan.

B. Using proposed design plans, calculate the impervious area and delineate the flow path of runoff from created, added, and/or demolished and replaced impervious surface area to each planned GI Practice.

C. Confirm that contributing drainage areas to each of the GI Practices do not exceed those noted in Section 3, Concept Development, Table 2.

Stormwater Design Step 4: Calculate RRv Provided

A. Use sizing tables within the individual Section 7, Green Infrastructure Practice Design Guidelines or perform volumetric calculations showing the storage volume provided:

For example: Bioretention surface storage
+ Bioretention subsurface storage
+ Permeable paver storage
+ Cistern storage
= *RRv Provided*

B. If the RRv Provided above is greater than or equal to the RRv Required from Step 1, proceed with the site design and plan submittal process.

C. If, during this step, it is found that the site constraints do not allow enough volume capture and storage space to meet the RRv Required, then determine the remaining runoff reduction volume:

RRv Required – RRv Provided = RRv Remaining

D. Sites not able to provide adequate volume to meet RRv Required need to meet additional water quality measures under Design Step 5.

Stormwater Design Step 5: Prepare Runoff Reduction Supplemental Design (if necessary)

If 100% of RRv Required cannot be met by fully applying the GI Practices in this manual, the remaining Runoff Reduction volume (RRv remaining) identified in Step 4 shall be increased by 20% (RRv remaining × 1.2) and shall be designed to be intercepted and treated in one or more stormwater management practice that provides at least an 80 percent reduction in TSS load in accordance with Section 74-513 (b), and the steps below:

A. Determine needed Water Quality protection volume (RRv remaining × 1.2).

B. Complete the Runoff Reduction Alternative Design Form and obtain approval from the City Reviewer.

C. Select the appropriate Water Quality Best Management Practice (BMP) for TSS reduction per the ordinance and staff guidance.

Stormwater Design Step 6: Develop a Landscape Plan

The plan must be consistent with recommendations from the selected GI Practices in Section 7, Green infrastructure Practice Design Guidelines, of this Manual and the City's Tree Ordinance. Follow the design guidelines for individual GI Practices to select appropriate vegetation for GI Practices and consult Appendix D, Planting List and Example Planting Plans, of this manual for a list of appropriate species.

A. Confirm that soil depth of the GI Practice is appropriate for selected vegetation.

B. Verify that vegetation can tolerate anticipated level of ponding in GI Practices.

6. PLAN SUBMITTAL PROCESS

Required Submittal Information

Applicants must develop a site plan using the checklist found at http://www.atlantawatershed.org. The checklist items relevant to stormwater management include the following:

- Existing and proposed ground contours and elevations
- Sanitary and storm sewer, structures and easements
- Location, configuration, and finished floor elevations for existing and proposed building structures
- Location, configuration, and finished elevations for existing and proposed paved areas
- Erosion and sediment control practices in conformance with the current edition of the *Manual for Erosion and Sediment Control in Georgia*, Chapter 6, issued by the Georgia Soil and Water Conservation Commission (http://gaswcc.org)

The plan submittal must include a clear delineation of contributing runoff areas and flow paths to each GI Practice, with specific design details including site-specific contours, invert elevations, and cross sections for each GI Practice.

Specific instructions should be included on the plans to avoid compaction of GI installations during construction.

7. GREEN INFRASTRUCTURE PRACTICE DESIGN GUIDELINES

The GI Practices listed below are those most frequently implemented on small commercial sites. A Design Guideline for each, including an overall description, typical locations for use, design information, operation and maintenance requirements, and visual examples follows in this section. Each Design Guideline contains step-by-step sizing of the practice to meet the RRv Required. Design Guidelines follow for these GI Practices:

- Bioretention
- Infiltration Trenches
- Bioswales
- Permeable Pavement
- Stormwater Planters
- Subsurface Infiltration
- Rainwater Harvesting/Cisterns
- Green Roofs

SMALL COMMERCIAL GUIDE

CITY OF ATLANTA, GEORGIA
DEPARTMENT OF WATERSHED MANAGEMENT

BIORETENTION

A bioretention area is a planted landscape area designed to receive and infiltrate or filter runoff. Bioretention systems are flexible, adaptable, and versatile stormwater management facilities that are effective at reducing runoff rates and pollutant loads for highly urban development and redevelopment sites. Because its shape is flexible, bioretention can be adapted to a site by lowering conventional raised landscape areas to be able to receive runoff. Bioretention areas typically consist of a flow inlet structure, a pretreatment element, a temporary ponding area with overflow, an engineered soil mix planting bed, vegetation, and an outflow regulating structure (for example, an upturned underdrain).

Bioretention areas can be planted to be aesthetically pleasing and look like 'typical' landscape areas.

Location

When possible, place bioretention in areas of the site that:

- Have the most permeable soils.
- Receive stormwater runoff primarily from impervious surfaces.
- Are in parking lot landscape islands, small pockets of open areas, or side yard buffer areas.
- Are 2 feet above the seasonally high water table, outside the public right of way unless appropriate maintenance agreement is completed, and away from underground utility lines, septic fields, and steep slope edges.
- Are 10 feet from building foundations or public roadway subgrade unless the design includes proper waterproofing techniques (such as an impermeable liner).

Bioretention areas can be designed to fit into tight urban spaces.

If the bioretention area will be close to a building, the design should include measures that will protect the building from water (such as an impermeable liner at the building side).

Design

General

- Bioretention storage includes up to three storage components (see detail on pages BioR-6 and -7): ponded surface storage, storage within the bioretention soil, and (optionally) stone storage below the bioretention soil (not shown). The size of the bioretention practice will vary depending on the impervious surface draining to it, the design ponding depth above the soil, and the depth of the amended soil and optional stone.
- The geometric design of urban bioretention is flexible and is usually dictated by other site elements and location constraints such as buildings, sidewalk widths, utility corridors, and retaining walls.
- The surface area of the practice depends on the storage volume needed, but the loading ratio of the impervious drainage area to the bioretention surface area should generally not exceed 10:1 to 20:1.
- For sloped sites, verify that the bottom of bioretention areas is at a constant elevation or that storage calculations take into consideration reduced storage due to slope. Use of bioretention areas in series with appropriately designed staged overflows can maximize storage on sloped sites.
- Use of the upturned underdrain pipe as shown in Appendix B, Supplemental Green Infrastructure Practice Details, will allow for a 100% RRv credit to be taken for the storage volume within the bioretention practice even though an underdrain is provided.

Step-by-Step Sizing

1. Verify the RRv Required (in cubic feet) for the site as outlined in Section 5, Design Process.
2. Determine the total bioretention surface area (in square feet) by summing each area identified on the concept plan.
3. The storage volume for bioretention is made up of two or three components calculated individually and then summed: surface storage, bioretention soil storage, and (optionally) storage in a deeper stone layer.
4. Use Table A and the surface area determined in Step 2 to find the surface storage volume for the intended design ponding depth. Alternatively, calculate the storage volume from the Step 2 surface area total by multiplying depth by surface area. The maximum allowable ponding depth for bioretention is 12 inches.

BIORETENTION TABLE A
Bioretention Surface Storage Volumes (cubic feet)

Bioretention Typical Dimensions (feet)	5x10	5x15	5x20	5x30	10x10	10x15	10x20	10x30	10x40	10x50	10x60	10x70	10x80	20x20	20x30	20x40	30x30
surface area (square feet)	50	75	100	150	100	150	200	300	400	500	600	700	800	400	600	800	900
Surface Storage at 6" Depth (cubic feet)	25	38	50	75	50	75	100	150	200	250	300	350	400	200	300	400	450
Surface Storage at 9" Depth (cubic feet)	38	56	75	113	75	113	150	225	300	375	450	525	600	300	450	600	675
Surface Storage at 12" Depth (cubic feet)	50	75	100	150	100	150	200	300	400	500	600	700	800	400	600	800	900

Use the typical dimensions or surface area determined in Step 2 and Table B to find the storage volume in the bioretention soil. Interpolate as necessary.

BIORETENTION TABLE B Bioretention Soil Storage Volumes for all Infiltration Rates (cubic feet) 100% RRv Credit by Volume																	
Bioretention Typical Dimensions (feet)	5x10	5x15	5x20	5x30	10x10	10x15	10x20	10x30	10x40	10x50	10x60	10x70	10x80	20x20	20x30	20x40	30x30
surface area (square feet)	50	75	100	150	100	150	200	300	400	500	600	700	800	400	600	800	900
Soil Storage at 18" Depth (cubic feet)	24	36	48	72	48	72	96	144	192	240	288	336	384	192	288	384	432
Soil Storage at 24" Depth (cubic feet)	32	48	64	96	64	96	128	192	256	320	384	448	512	256	384	512	576
Soil Storage at 36" Depth (cubic feet)	48	72	96	144	96	144	192	288	384	480	576	672	768	384	576	768	864
note: table assumes a void ratio of 0.32																	

5. If additional stone storage is provided below the bioretention soil, see the Supplemental Stone Storage Volume table in the Subsurface Infiltration Practice Design Guidelines. This storage volume is added as the third component of the bioretention practice storage volume.
6. Combine the bioretention RRv storage volumes (surface storage plus bioretention soil storage plus stone storage, if applicable) with the RRv for other BMPs as outlined in Section 5, Design Process, and proceed with Design Process Step 4 summing treatment volumes to attain the RRv Provided.

Inlet/Flow-Regulating Structures and Pretreatment Elements

Where possible, direct runoff via sheet flow across energy dissipation areas or vegetated strips to the bioretention area to filter out sediment, trash, floatables, and pollutants.

Install appropriate inlet/flow-regulating structures and stabilize them using acceptable pretreatment and energy dissipation measures.

- The following forms of inlets are recommended. For sizing and design information see Appendix B, Supplemental Green Infrastructure Practice Details:
  - Sheet flow off a depressed curb with a 3-inch drop
  - Curb cuts into the bioretention area
  - Grates or trench drains that convey flows across a sidewalk from the curb or downspouts
- The following forms of pretreatment and energy dissipation are recommended. For sizing and design information see Appendix B, Supplemental Green Infrastructure Practice Details:
  - Grass filter strip
  - Forebay
  - River cobble diaphragm or thick filtering vegetation

Temporary Surface Storage (Ponding)

A ponding depth of 9 inches is suggested (maximum of 12 inches), and drain-down time of 48 hours is required over the entire area.

Engineered Soil Mix Planting Bed

- Use an appropriate mulch layer (2 to 4 inches of fine, shredded hardwood) and avoid lighter mulch material that may float.
- Install an appropriate engineered soil mix at a minimum depth of 18 inches for plants and a minimum of 3 feet for trees. Ensure soil is not compacted by construction traffic during or after placement. Alternate engineered soil mixes will be considered with appropriate tests and documentation.
  - Texture: Sandy loam or loamy sand
  - Sand Content: 60%–70% clean, washed sand (dry weight basis)
  - Clay: Not greater than 10% (dry weight basis)
  - Topsoil: 8%–12% (dry weight basis)
  - Compost: 5%–10% (dry weight basis)
  - Infiltration Rate: 0.5 inch/hour minimum, preferred 1-2 inch/hour

- Ensure that the bottom of the bioretention practice is not compacted during construction, or is roto-tilled to a depth of 6 inches to counteract compaction prior to bioretention soil placement. Tilling 3 inches of sand into the bottom is another acceptable method of counteracting compaction.

Outflow-Regulating Structure

Because of inconsistent infiltration on smaller commercial sites, incorporate an upturned underdrain system that consists of washed gravel and perforated pipe (see typical detail) to provide an easier way to tie into the existing stormwater infrastructure and additional storage and increased infiltration. The design should include:

- 4- to 6-inch diameter perforated PVC pipe (AASHTO M252)
- Upturned solid pipe 12 to 18 inches below the bottom of the soil surface

Vegetation

Vegetation commonly planted in bioretention areas includes native trees, shrubs, and other herbaceous vegetation. When developing a landscape plan, choose vegetation that can stabilize soils and tolerate the design stormwater runoff rates and volumes. Vegetation used in bioretention areas should be able to tolerate both wet and dry conditions. Use of non-clay-backed sod on any grassed bioretention side slopes is required instead of seeding.

- Develop a specific landscape/planting plan for each bioretention area.
- See Appendix D for a recommended plant list and example planting plans.

Maintenance

Routine operation and maintenance is essential to gain public acceptance of highly visible urban bioretention areas and ensure properly functioning. A legally binding Inspection and Maintenance agreement shall be completed. A sample Inspection and Maintenance Checklist is included in this document.

- Perform weeding, pruning, fertilizing, and trash removal as needed to maintain appearance.
- Water the plants during drought conditions as necessary.
- To ensure proper performance, check that stormwater infiltrates properly into the soil within 48 hours after a storm.
- If excessive ponding time is observed on the surface or within the clean-out, undertake corrective measures such as inspection for soil compaction and underdrain clogging.

A healthy and properly maintained bioretention area.

The pretreatment area and overflow structure have been properly maintained and are clear of debris.

Example

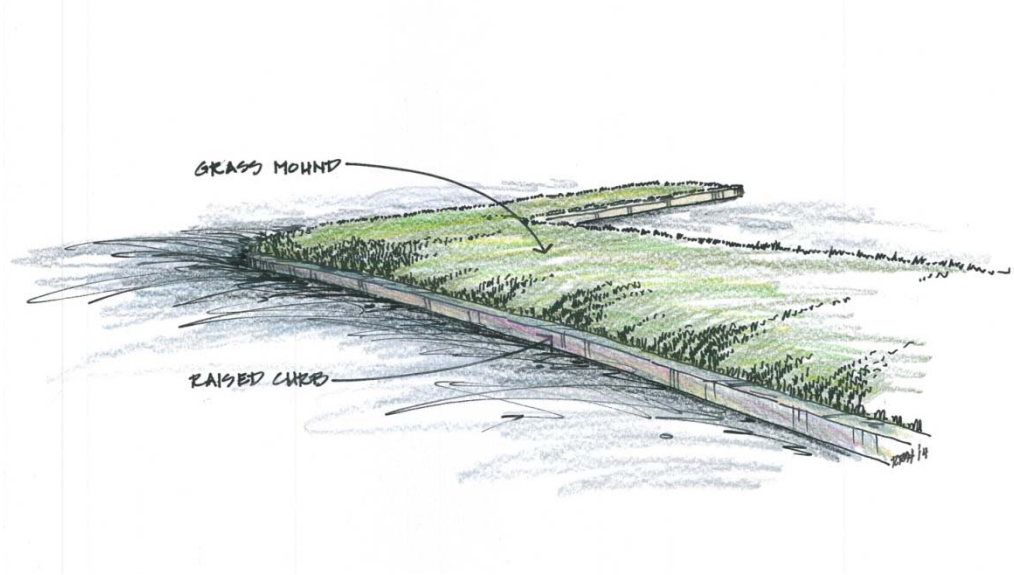

A typical small commercial parking lot consisting of a "mounded" landscape island planted with turf grass.

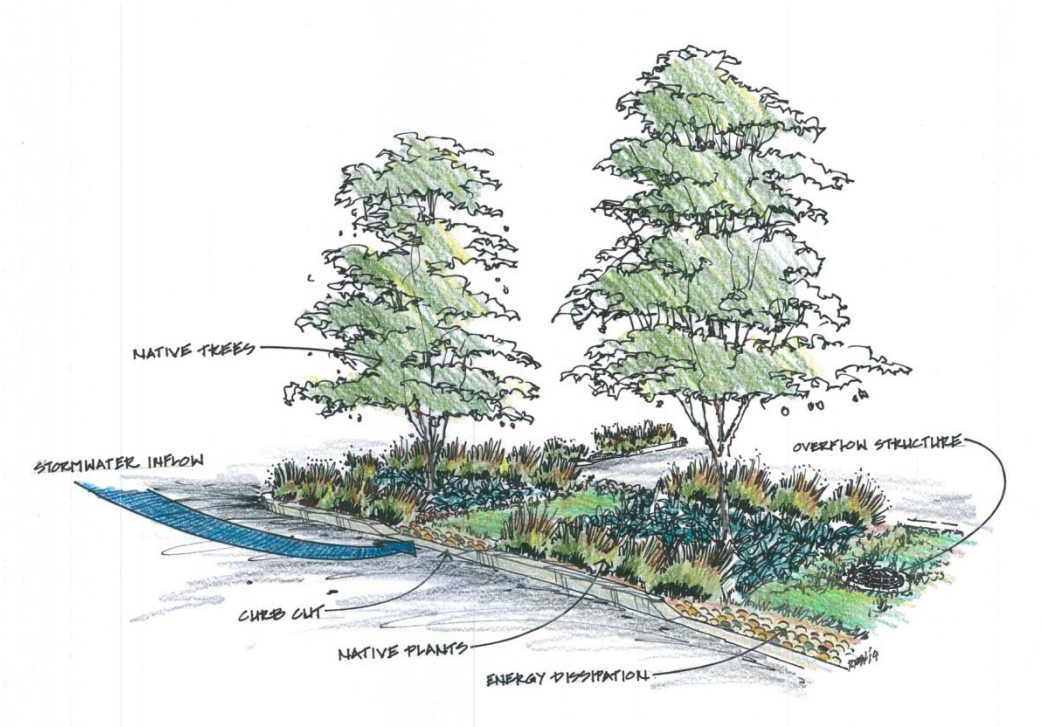

A small commercial parking lot utilizing the landscape island as a bioretention system.

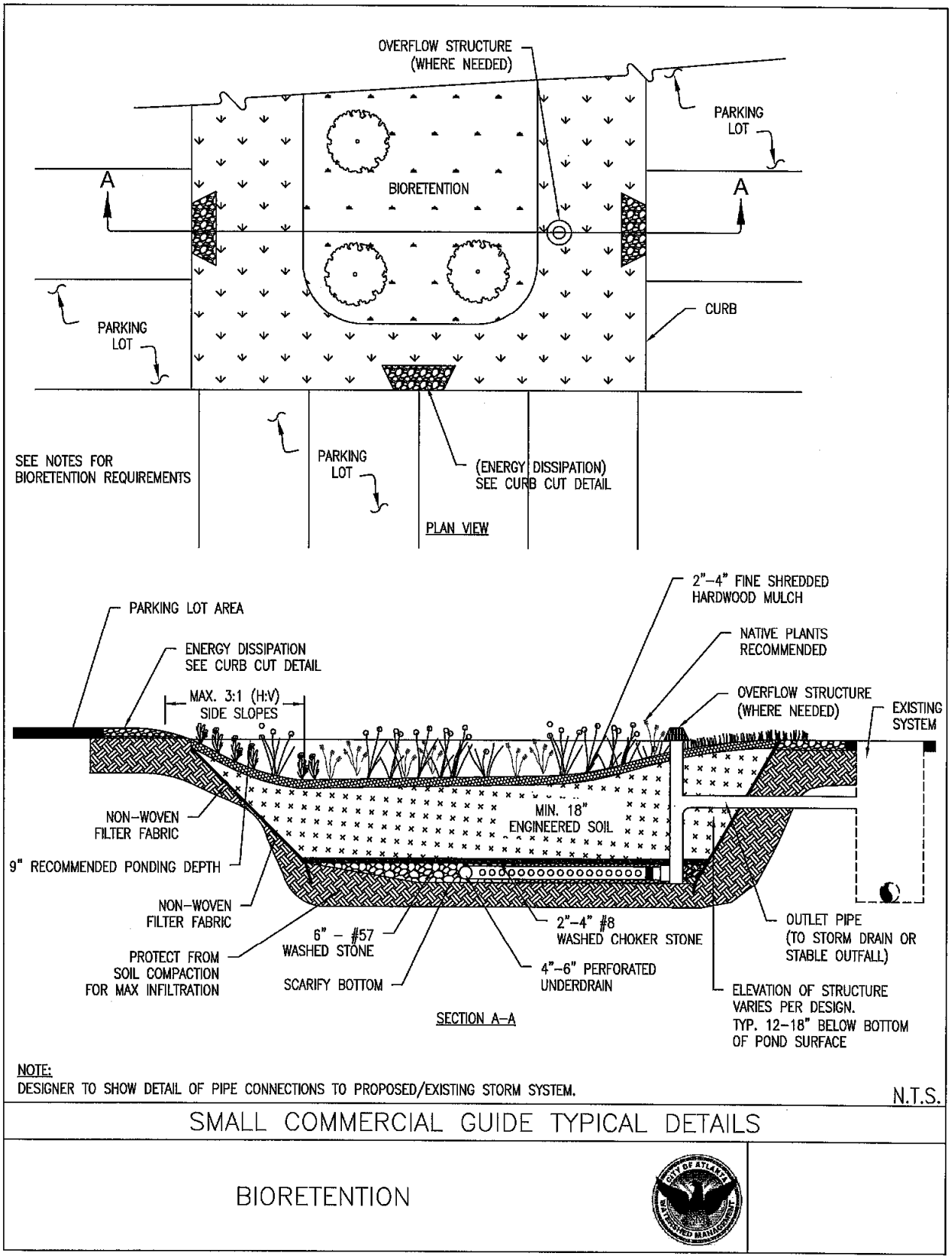
OVERFLOW STRUCTURE
(WHERE NEEDED)
PARKING
LOT
A
BIORETENTION
A
CURB
PARKING
LOT
SEE NOTES FOR
BIORETENTION REQUIREMENTS
PARKING
LOT
(ENERGY DISSIPATION)
SEE CURB CUT DETAIL
PLAN VIEW
2"–4" FINE SHREDDED
HARDWOOD MULCH
PARKING LOT AREA
NATIVE PLANTS
RECOMMENDED
ENERGY DISSIPATION
SEE CURB CUT DETAIL
MAX. 3:1 (H:V)
SIDE SLOPES
OVERFLOW STRUCTURE
(WHERE NEEDED)
EXISTING
SYSTEM
NON–WOVEN
FILTER FABRIC
MIN. 18"
ENGINEERED SOIL
9" RECOMMENDED PONDING DEPTH
NON–WOVEN
FILTER FABRIC
6" – #57
WASHED STONE
2"–4" #8
WASHED CHOKER STONE
OUTLET PIPE
(TO STORM DRAIN OR
STABLE OUTFALL)
PROTECT FROM
SOIL COMPACTION
FOR MAX INFILTRATION
SCARIFY BOTTOM
4"–6" PERFORATED
UNDERDRAIN
ELEVATION OF STRUCTURE
VARIES PER DESIGN.
TYP. 12–18" BELOW BOTTOM
OF POND SURFACE
SECTION A–A
NOTE:
DESIGNER TO SHOW DETAIL OF PIPE CONNECTIONS TO PROPOSED/EXISTING STORM SYSTEM.
N.T.S.
SMALL COMMERCIAL GUIDE TYPICAL DETAILS
BIORETENTION

NOTES:

1. APPROPRIATE PLANTS AND PLANTING SCHEDULE SHALL BE PROVIDED.
   a. WOODY VEGETATION SHOULD NOT BE PLANTED WITHIN TWO FEET OF INFLOW OR OUTFLOW STRUCTURES.
2. APPROPRIATE MULCH LAYER SHALL BE PROVIDED (2–4" OF FINE SHREDDED HARDWOOD)
3. ENGINEERED SOIL MIX AT LEAST 18" DEEP. ALTERNATE ENGINEERED SOIL MIXES WILL BE CONSIDERED WITH APPROPRIATE TEST AND DOCUMENTATION. GREATER DEPTH OF ENGINEERED SOIL MAY BE NEEDED DEPENDING ON PLANT TYPE AND SPECIFICATIONS.
4. GRAVEL AND PERFORATED PIPE UNDERDRAIN SYSTEM
   a. GRAVEL: 6" LAYER ASTM D448 SIZE NO.57 WASHED STONE AND SHOULD BE SEPARATED BY A THIN 2 TO 4 INCH LAYER OF CHOKER STONE (ASTM D 448 SIZE NO. 8, 3/8" TO 1/8" OR ASTM D 448 SIZE NO. 89. 3/8" TO 1/16")
   b. PERFORATED PIPE: 4 TO 6" PERFORATED PVC (AASHTO M 252), 3/8" PERFORATION SPACED 6' ON CENTER. NO SOCK PIPES SHALL BE PERMITTED.
   c. NON–WOVEN SEPARATION GEOTEXTILE MAY BE UTILIZED ON THE SIDE SURFACE INTERFACES ONLY
5. INSTALLATION SHOULD OCCUR AFTER THE CONTRIBUTING DRAINAGE AREAS TO THE BIORETENTION AREA HAVE BEEN STABILIZED. IF THIS IS NOT FEASIBLE, STORMWATER FLOW SHALL BE DIVERTED AROUND THE BIORETENTION AREA. PROTECT AREA WITH TEMPORARY EROSION AND SEDIMENT CONTROL MEASURES. IF SEDIMENT ACCUMULATES IT MUST BE REMOVED.
6. INSTALLATION OF ENGINEERED SOILS MUST BE COMPLETED IN A MANNER THAT WILL ENSURE PRESERVATION OF THE INFILTRATIVE CAPACITY OF THE UNDERLYING SOILS. THE MOISTURE CONTENT OF THE SOIL SHALL BE LOW ENOUGH TO PREVENT CLUMPING AND COMPACTION DURING PLACEMENT.
7. TO PREVENT COMPACTION WITHIN THE LIMITS OF THE BASINS, ONLY HAND LABORERS, SMALL EXCAVATION HOES WITH WIDE TRACKS, LIGHT EQUIPMENT WITH TURF TIES, MARSH EQUIPMENT OR WIDE–TRACK LOADERS MAY BE USED. NO HEAVY EQUIPMENT SHALL BE USED WITHIN THE PERIMETER OF THE BIORETENTION FACILITY BEFORE, DURING, OR AFTER THE PLACEMENT OF THE BIORETENTION SOIL MIX. GROUND PRESSURE SHOULD NOT EXCEED 7 PSI.
8. SOIL SURFACES SHALL BE SCARIFIED TO AERATE AND REDUCE SOIL COMPACTION. SOIL SHALL BE PLACED IN 6" LOOSE DEPTH LIFTS AND LIGHTLY HAND–TAMPED OR COMPACTED WITH A WATER–FILLED LANDSCAPE ROLLER, TO REDUCE POTENTIAL FOR EXCESSIVE SETTLING. NO OTHER MECHANICAL EQUIPMENT SHALL BE USED TO COMPACT THE ENGINEERED SOIL OR UNDERLYING SOILS.
9. LOOSEN SUBGRADE SOILS THAT HAVE BEEN COMPACTED OR SMEARED BY RAKING, DISKING OR TILLING TO A MINIMUM DEPTH OF 6 INCHES.
10. UNIFORMLY GRADE BIORETENTION SOIL MIX TO ACHIEVE A SMOOTH SURFACE. DO NOT OVER–WORK OR EXCESSIVELY COMPACT BIORETENTION SOIL MIX. GRADE TO CROSS SECTIONS, THICKNESS AND ELEVATIONS INDICATED ON PLANS. SETTLING OF SOIL BY WALKING ON SURFACE, WORKING WITH HAND OR LOW GROUND PRESSURE EQUIPMENT (< 7 PSI) IS ACCEPTABLE.
11. DURING EXCAVATION, HEAVY MACHINERY SHOULD NOT DRIVE OVER EXPOSED UNDERLYING SOILS.
12. EXCAVATE IN DRY CONDITIONS AS OFTEN AS PRACTICABLE.
13. USE TRACKED VEHICLES.
14. EXCAVATE FINAL 9"–12" WITH TEETH OF BUCKET (DO NOT SMEAR).
15. SUBSOILS SHALL BE SCARIFIED (NOT COMPACTED) PRIOR TO PLACEMENT OF CLEAN–WASHED AGGREGATE SUBBASE.

N.T.S.

SMALL COMMERCIAL GUIDE TYPICAL DETAILS

BIORETENTION

Sample Bioretention Inspection and Maintenance Checklist

Inspector:	
Date:	***Time:***
Weather: ***Rainfall over previous 2-3 days?***	
Bioretention Location:	

Mark items in the table below using the following key:

- **X** Needs immediate attention
- – Not Applicable
- ✓ Okay
- **?** Clarification Required

Bioretention Components:

Items Inspected	Checked		Maintenance Needed		Inspection Frequency
DEBRIS CLEANOUT	**Y**	**N**	**Y**	**N**	
Bioretention and contributing areas clean of debris.					Monthly
No dumping of yard wastes into bioretention.					Monthly
Litter (trash, debris, etc.) have been removed.					Monthly
VEGETATION					
No evidence of erosion.					Monthly
Is plant composition still according to approved plans?					Monthly
No placement/growth of inappropriate plants.					Monthly
DEWATERING AND SEDIMENTATION					
Bioretention dewaters between storms.					After Major Storms
No evidence of standing water.					
No evidence of surface clogging.					
OUTLETS/OVERFLOW SPILLWAY					
Good condition, no need for repair.					Annually and After Major Storms
No evidence of erosion.					
No evidence of any blockages.					
INTEGRITY OF BIORETENTION					
Bioretention has not been blocked or filled inappropriately.					Annually
Mulch layer is still in place (depth of at least 2”).					Annually
Noxious plants or weeds removed.					Annually

COMMENTS:

OVERALL CONDITION OF FACILITY:

In accordance with approved design plans? Y / N *In accordance with As Built plans?* Y / N

Dimension on as built:

Field Verified Dimension:

Maintenance required as detailed above? Y / N Compliance with any other required conditions? Y / N

Comments: _____

Dates by which maintenance must be completed: _____ /_____ /_____

Dates by which outstanding information is required: _____ /_____ /_____

Inspector's signature: _____

Engineer/Agent's signature: _____

Engineer/Agent's name printed: _____

SMALL COMMERCIAL GUIDE

CITY OF ATLANTA, GEORGIA
DEPARTMENT OF WATERSHED MANAGEMENT

INFILTRATION TRENCHES

Infiltration trenches are gravel-filled holding areas that receive, store, and infiltrate stormwater runoff from roofs, driveways, parking lots, and other contributing site surface areas. The runoff is temporarily stored as it passes through the surrounding stone bedding and infiltrates into the adjacent subsoil. An overflow mechanism (surcharge pipe, connection to larger infiltration area, etc.) is typically provided to ensure that excess runoff is safely and efficiently conveyed to downstream drainage systems or receiving waters.

An Infiltration Trench can fit into tight spaces that are typical of small commercial sites. *Photo courtesy of: http://www.portlandoregon.gov/bes/article/202883*

Location

- Choose a location keeping these factors in mind:
  - Favorable infiltration areas on the site
  - Areas that drain stormwater runoff primarily from impervious surfaces
  - Small pockets of open areas, side yard buffer areas, and landscape beds
  - Level area to ensure that runoff is evenly distributed over the surface area
  - Possible conflicts with site or building utilities
  - Aesthetic considerations
- Locate the infiltration trench 2 feet above the seasonally high water table; outside the public right-of-way unless an appropriate maintenance agreement is completed; and away from utility lines, septic fields, and steep slopes.
- For sloped sites, verify that the bottom of the infiltration trench is at a constant elevation or that storage calculations consider the reduced storage due to the sloped trench.
- Terraced infiltration trenches in series with appropriately designed staged overflows can maximize storage on a sloped site.
- Infiltration trenches should be located at least 5 feet from building foundations and 10 feet from buildings with basements and property lines; and away from potable water wells or public roadway subgrade unless the design includes proper waterproofing techniques (such as an impermeable liner).
- Subsurface soils need to be appropriately loosened and tilled to enhance infiltration characteristics.

Design

General

- The size of the infiltration trenches will vary, depending on the impervious surface draining to it and the depth of the stone.
- The actual geometric design of an infiltration trench is usually dictated by other site elements such as buildings, sidewalk widths, utility corridors, and retaining walls.
- As a rule of thumb, shallow infiltration trenches with a large surface area will perform better (and require less maintenance) than a deep infiltration trench with a small surface area.
- Surface area depends on storage volume, but should generally not exceed a maximum loading ratio of 5 to 10% of the drainage area.
- For sloped sites, verify that the bottom of the infiltration trench is at a constant elevation or that storage calculations consider the reduced storage due to the sloped trench.
    - Use of terraced infiltration trenches in series with appropriately designed staged overflows can maximize storage on a sloped site.
- The design should include appropriate pretreatment, such as:
    - Vegetated filter strip with a minimum 10-foot length
    - Vegetated buffer if the trench receives runoff from multiple directions
    - Sediment forebay or similar sedimentation chamber
    - Oil and grit separator if runoff is from highly polluted, urban hotspot areas
- Exit velocities from pretreatment must be non-erosive and discharge to stone for the 2-year, 24-hour storm event
- The infiltration trench design should include:
    - Storage in an excavated trench backfilled with coarse washed stone, river rock, or pea gravel, and lined with filter fabric on sides
    - Filter layer composed of 3/8-inch pea gravel or sand separating the native soils and stone storage
    - One or more observation well consisting of 4-inch to 6-inch PVC pipe that extends to the bottom of the infiltration trench
    - Overflow relief drain
    - Surface overflow routing
- The infiltration trench specifications should meet the following requirements:
    - Fully drains within 48 hours
    - Depth is a maximum of 5 feet
    - Bottom slope of trench is flat across its width and length or appropriately staged storage overflow weirs have been designed
    - Overflow channel to safely pass flows that exceed the storage capacity of the trench

Step-by-Step Sizing

1. Establish the RRv Required (in cubic feet) for the contributing impervious area using Figure 5 in Section 5, Design Process.
2. Determine the dimensions and depth of the proposed infiltration trench.

3. Confirm the site infiltration rates per infiltration testing parameters in Appendix C.
4. Use the dimensions determined in Step 2, and Table A for infiltration rates greater than 0.25 inch per hour or Table B for infiltration rates less than 0.25 inch per hour to find the storage volume provided in the stone.

INFILTRATION TRENCH TABLE A
Stone Storage Volumes for Infiltration Rates greater than 0.25 inches/hour or with Upturned Underdrain (cubic feet)
100% RRv Credit by Volume

Infiltration Trench Typical Dimensions (feet)	3x10	3x20	3x30	3x40	3x50	5x10	5x20	5x30	5x40	5x50	5x60	5x70	5x80	5x90	5x100	8x100	10x100
surface area (square feet)	30	60	90	120	150	50	100	150	200	250	300	350	400	450	500	800	1000
Stone Storage at 18" Depth (cubic feet)	18	36	54	72	90	30	60	90	120	150	180	210	240	270	300	480	600
Stone Storage at 24" Depth (cubic feet)	24	48	72	96	120	40	80	120	160	200	240	280	320	360	400	640	800
Stone Storage at 36" Depth (cubic feet)	36	72	108	144	180	60	120	180	240	300	360	420	480	540	600	960	1200
Stone Storage at 48" Depth (cubic feet)	48	96	144	192	240	80	160	240	320	400	480	560	640	720	800	1280	1600
Stone Storage at 60" Depth (cubic feet)	60	120	180	240	300	100	200	300	400	500	600	700	800	900	1000	1600	2000
note: table assumes a void ratio of 0.40																	

INFILTRATION TRENCH TABLE B
Stone Storage Volumes for Infiltration Rates less than 0.25 inches/hour (cubic feet)
50% RRv Credit by Volume

Infiltration Trench Typical Dimensions (feet)	3x10	3x20	3x30	3x40	3x50	5x10	5x20	5x30	5x40	5x50	5x60	5x70	5x80	5x90	5x100	8x100	10x100
surface area (square feet)	30	60	90	120	150	50	100	150	200	250	300	350	400	450	500	800	1000
Cubic Feet of Stone Storage at 18" Depth	9	18	27	36	45	15	30	45	60	75	90	105	120	135	150	240	300
Cubic Feet of Stone Storage at 24" Depth	12	24	36	48	60	20	40	60	80	100	120	140	160	180	200	320	400
Cubic Feet of Stone Storage at 36" Depth	18	36	54	72	90	30	60	90	120	150	180	210	240	270	300	480	600
Cubic Feet of Stone Storage at 48" Depth	24	48	72	96	120	40	80	120	160	200	240	280	320	360	400	640	800
Cubic Feet of Stone Storage at 60" Depth	30	60	90	120	150	50	100	150	200	250	300	350	400	450	500	800	1000
note: table assumes a void ratio of 0.40																	

Maintain

Routine operation and maintenance is essential to ensure proper functioning of infiltration trenches. The following items should be included in the overall maintenance plan, and a legally binding Inspection and Maintenance agreement shall be completed. A sample Inspection and Maintenance Checklist is included in this document.

- Routinely inspect and clean out gutters and catch basins to reduce sediment load to infiltration trenches.
- Clean intermediate sediment trap sumps, replace filters, and otherwise clean pretreatment areas in directly connected systems. At minimum, cleaning should occur quarterly.

- Routinely examine to ensure that inlet and outlet devices are free of debris and operational.
- After storm events, evaluate the drain-down time of the infiltration trenches by measuring the standing water in the observation well to ensure the drain-down time of 48 hours or less.

Examples

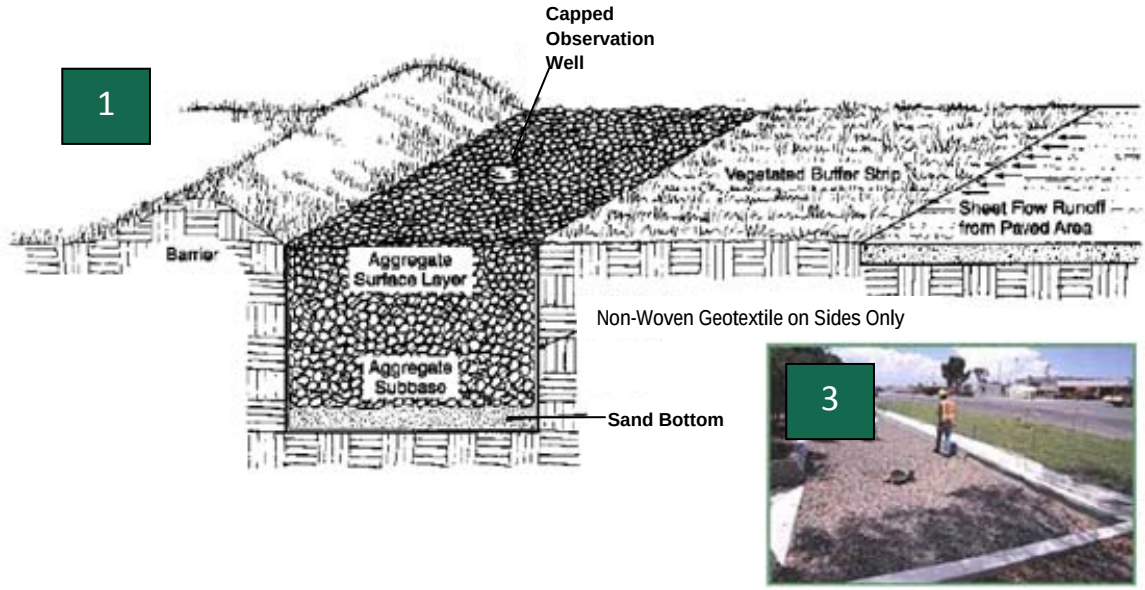

Figures depicting: (1) a subsurface infiltration facility cross section, (2) a facility during construction, and (3) a facility after construction is complete. Photos courtesy of: http://www.csc.temple.edu/t-vssi/BMPSurvey/delaware_countycc.htm and http://www.esf.edu/ere/endreny/GICalculator/InfiltrationIntro.html

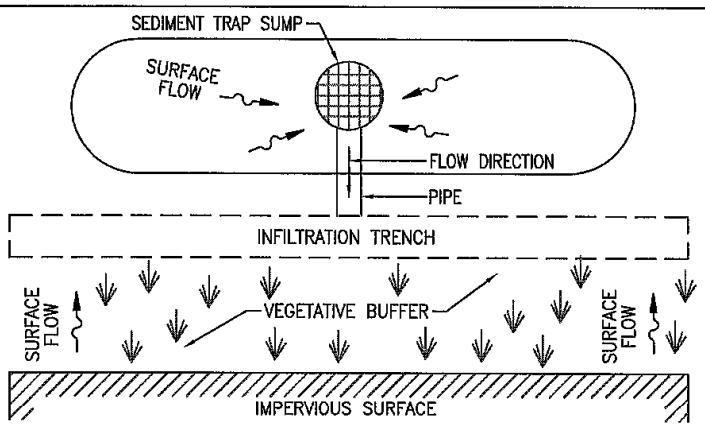

PLAN VIEW

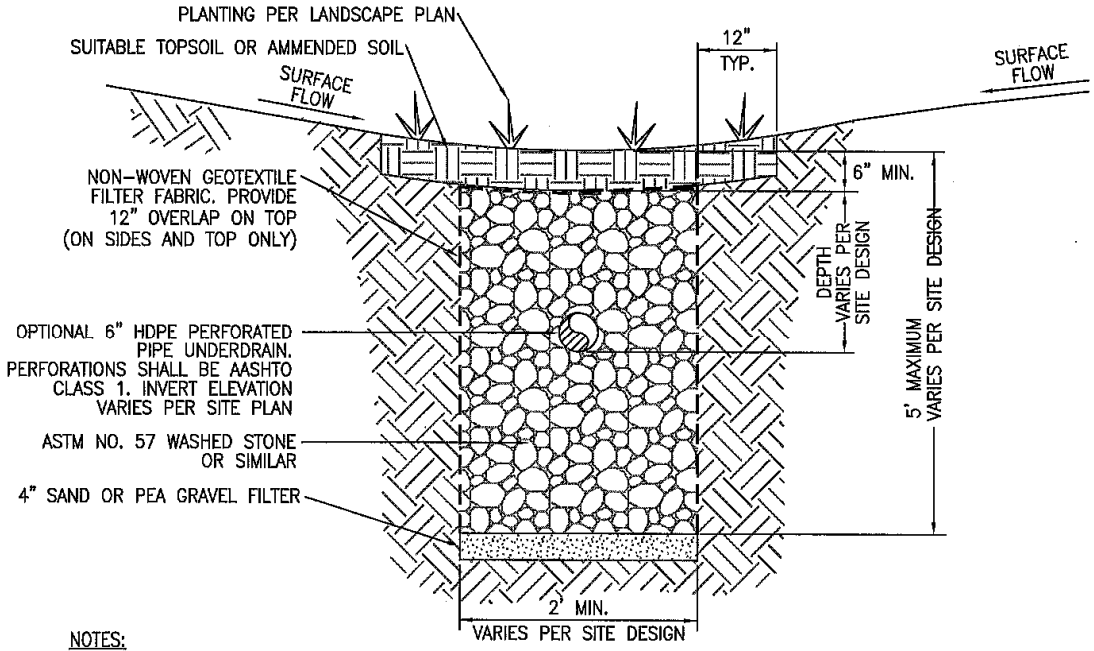

NOTES:

1. PROVIDE 4" TO 6" DIAMETER PVC OBSERVATION WELL TO BOTTOM OF TRENCH.
2. DURING EXCAVATION, HEAVY MACHINERY SHOULD NOT DRIVE OVER EXPOSED UNDERLYING SOILS.
3. EXCAVATE IN DRY CONDITIONS AS OFTEN AS PRACTICABLE.
4. USE TRACKED VEHICLES.
5. EXCAVATE FINAL 9"–12" WITH TEETH OF BUCKET (DO NOT SMEAR).
6. SUBSOILS SHALL BE SCARIFIED (NOT COMPACTED) PRIOR TO PLACEMENT OF CLEAN-WASHED AGGREGATE SUBBASE.

N.T.S.

SMALL COMMERCIAL GUIDE TYPICAL DETAILS

INFILTRATION TRENCH

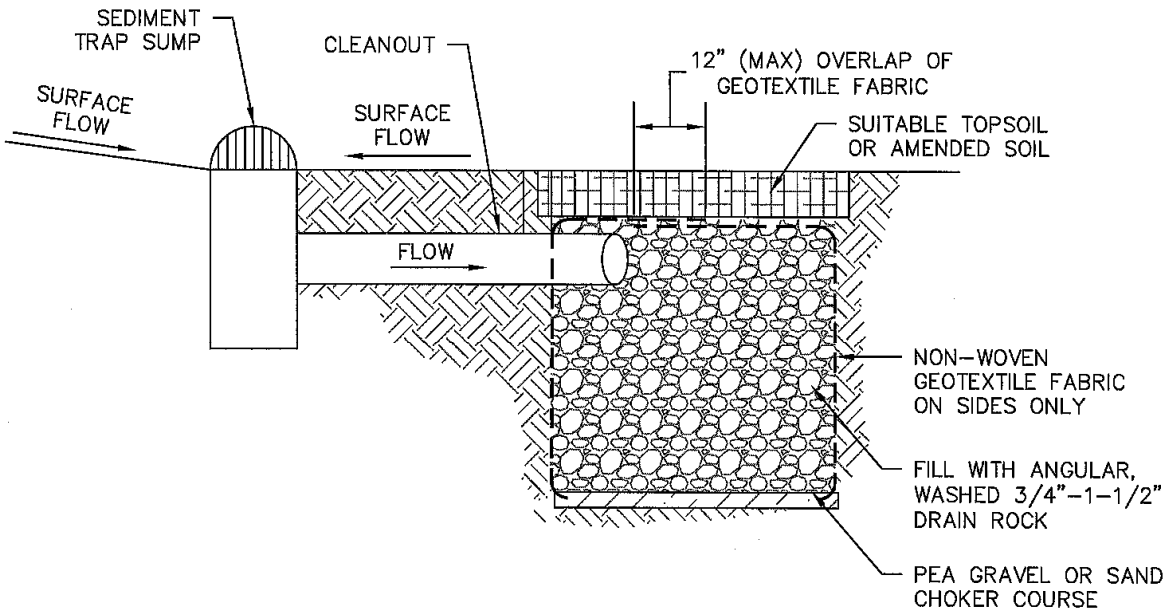

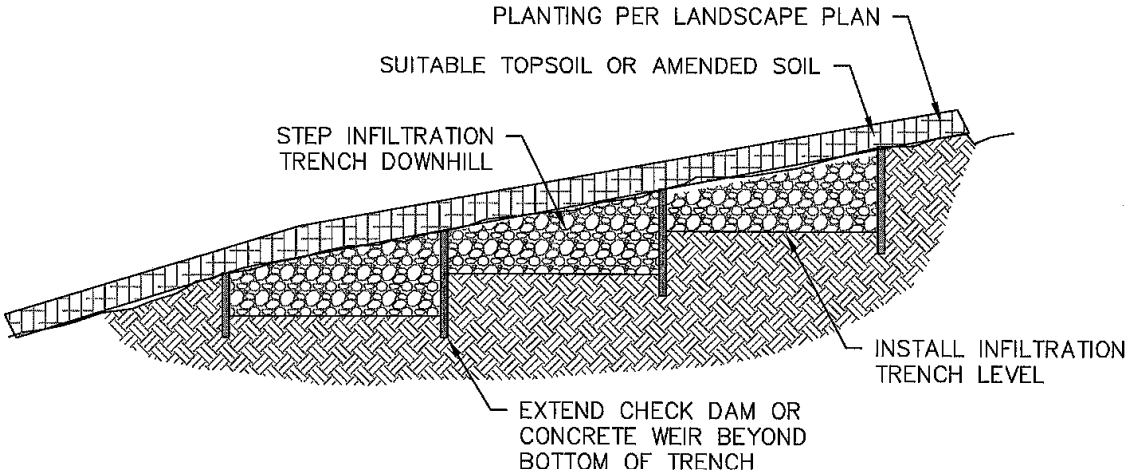

STEP INFILTRATION TRENCH DOWNHILL
(ON A SLOPE 5% OR GREATER)

N.T.S.

SMALL COMMERCIAL GUIDE TYPICAL DETAILS

STEP INFILTRATION TRENCH

Sample Infiltration Trench Inspection and Maintenance Checklist

Inspector:	
Date:	***Time:***
Weather: ***Rainfall over previous 2-3 days?***	
Infiltration Trench Location:	

Mark items in the table below using the following key:

- **X** Needs immediate attention
- – Not Applicable
- ✓ Okay
- **?** Clarification Required

Infiltration Trench Components:

Items Inspected	Checked		Maintenance Needed		Inspection Frequency
DEBRIS CLEANOUT	**Y**	**N**	**Y**	**N**	
Infiltration trench and contributing areas clean of debris.					Monthly
No dumping of yard wastes into infiltration trench.					Monthly
Litter (trash, debris, etc.) have been removed.					Monthly
DEWATERING AND SEDIMENTATION					
Infiltration trench dewaters between storms.					After Major Storm
No evidence of standing water.					
No evidence of surface clogging.					
OUTLETS/OVERFLOW SPILLWAY					
Good condition, no need for repair.					Annual, and After Major Storm
No evidence of erosion.					
No evidence of any blockages.					
INTEGRITY OF SYSTEM					
Infiltration trench has not been blocked or filled inappropriately.					Annual
No evidence of infiltration trench failure.					Annual

COMMENTS:

OVERALL CONDITION OF FACILITY:

In accordance with approved design plans? Y / N *In accordance with As Built plans?* Y / N

Dimension on as built:

Field Verified Dimension:

Maintenance required as detailed above? Y / N Compliance with other required conditions? Y / N

Comments: _____

_____

Dates by which maintenance must be completed: _____ /_____ /_____

Dates by which outstanding information is required: _____ /_____ /_____

Inspector's signature: _____

Engineer/Agent's signature:

Engineer/Agent's name printed: _____

SMALL COMMERCIAL GUIDE

CITY OF ATLANTA, GEORGIA
DEPARTMENT OF WATERSHED MANAGEMENT

BIOSWALES

A bioswale is a vegetated, open, conveyance channel, filled with an engineered soil mix and planted with a combination of grasses and other herbaceous plants, shrubs, or trees. Bioswales are essentially linear bioretention areas that are designed to capture and temporarily store runoff in the amended soils and provide infiltration and water quality treatment. Check dams maximize these functions by creating ponding areas where settling and infiltration can occur. Commercial facilities often have landscaped or grassed areas that can also serve as drainage pathways and infiltration areas. A bioswale is a practical replacement for stormwater conveyance by roadway median strips and parking lot curb and gutter.

Terraced bioswale accepts runoff from roof drains. Grade control structures allow infiltration Klaus Building - Georgia Tech – Atlanta, Georgia

Location

- Bioswales should be located in areas with slopes about 0.5%, but steeper areas can be terraced to provide staged conveyance.
- A minimum of 2 feet is required between the bottom of the practice and the seasonally high water table.
- The practice can be utilized within parking lot islands, median strips, and side yard buffer areas.
- Locate the practice at least 5 feet from building foundations, and 10 feet from buildings with basements and property lines; outside the public right of way unless an appropriate maintenance agreement is completed; and away from utility lines, septic fields, and steep slopes.

Curb cut entrance to bioswale. Photo courtesy of www.americanforests.org.

Bioswales can function as a substitute for parking lot curb and gutter systems.

Design

- Bioswales can include up to three storage components, depending on the design: ponded surface storage, storage within the bioswale soil, and optional stone storage below the bioswale soil (not shown in the attached detail). The dimensions of the bioswale practice will vary, depending on the impervious surface area draining to it, the length of the conveyance across the site, the ponding depth above the soil, and the depth of the amended soil and optional stone.
- If bioswales are the principal conveyance from the site, they should be sized to convey peak discharge runoff from the contributing area without eroding the bioswale.
- Consider the site's natural topography when choosing the location for the bioswale. Runoff from impervious areas should be easily directed to the practice. The recommended drainage area to a bioswale is 5% of contributing drainage area.
- Investigate the feasibility of infiltration according to conditions in the area proposed for the bioswale.
- The actual geometric design of bioswales is usually dictated by other site elements such as buildings, sidewalk widths, utility corridors, and retaining walls.
    - Typical dimensions for a bioswale should be 2 to 8 feet wide with 3:1 (H:V) side slopes (maximum 2:1).
- Pretreatment is preferred and can extend the life of the bioswale. For sizing and design information see Appendix B, Supplemental Green Infrastructure Practice Details. The following forms of pretreatment and energy dissipation are recommended:
    - Grass filter strip
    - Forebay
    - River cobble diaphragm or drop inlet with thick filtering vegetation
- The slope along the length of the bottom of the bioswale should not exceed 0.5%. If the slope is greater than 0.5%, then lined check dams or a series of terraced subsoil steps should be used to make the effective slope 0.5% or less, to allow for maximum infiltration.
- Bioswale systems consist of:
    - An open conveyance channel
    - A filter bed of engineered soil mix that is a minimum of 36 inches deep. Engineered soil shall consist of the following:
        - Texture: Sandy loam or loamy sand
        - Sand Content: 60%–70% clean, washed sand (dry weight basis)
        - Clay: not greater than 10% (dry weight basis)
        - Topsoil: 8%–12% (dry weight basis)
        - Compost: 5%–10% (dry weight basis)
        - Infiltration Rate: 0.5 inch/hour minimum, preferred 1-2 inch/hour
    - Gravel and optional perforated pipe underdrain system (see typical detail).
    - A ponded depth of 9 inches or less is recommended (maximum 12 inches) with a drain time less than 48 hours.
- Bioswales must:
    - Hold and slowly convey the design storage (1 inch) without erosion
    - Safely convey the overbank flood protection rainfall event (for example, a 25-year, 24-hour event) or have a flow splitter to divert excess runoff around the practice

Step-by-Step Sizing

1. Verify the RRv Required (in cubic feet) for the site as outlined in Section 5, Design Process, of this document.
2. Determine the total bioswale surface area (in square feet) by summing each area identified on the concept plan.

   The storage volume for bioswales can consist of multiple components calculated individually and then summed: surface storage, bioswale soil storage, and (optional) storage in a deeper stone layer.
3. Confirm the site infiltration rates per infiltration testing parameters in Appendix C.
4. Use Table A and surface area determined in Step 2 to find the surface storage volume for the intended design ponding depth. Alternatively, calculate the storage volume from the Step 2 surface area total by multiplying depth by the surface area. The maximum allowable ponding depth for bioswales is 12 inches.

BIOSWALE TABLE A
Bioswale Surface Storage Volumes (cubic feet)

Bioswale Typical Dimensions (feet)	3x10	3x20	3x30	3x40	3x50	5x10	5x20	5x30	5x40	5x50	5x60	5x70	5x80	5x90	5x100	8x100	10x100
surface area (square feet)	30	60	90	120	150	50	100	150	200	250	300	350	400	450	500	800	1000
Surface Storage at 6" Depth (cubic feet)	15	30	45	60	75	25	50	75	100	125	150	175	200	225	250	400	500
Surface Storage at 9" Depth (cubic feet)	23	45	68	90	113	38	75	113	150	188	225	263	300	338	375	600	750

5. Optional use of the upturned pipe underdrain as shown in Appendix B, Supplemental Green Infrastructure Practice Details, will allow a 100% RRv credit to be taken for the storage volume within the bioswale practice for soils with less than 0.25 inch/hour infiltration.
6. Use the typical dimensions or surface area determined in Step 2 and Table B for infiltration rates greater than 0.25 inch/hour or a bioswale with an upturned underdrain pipe. Use Table C for infiltration rates less than 0.25 inch/hour with an underdrain to find the storage volume in the bioswale soil. Interpolate as necessary.

BIOSWALE TABLE B
Bioswale Soil Storage Volumes for Infiltration Rates greater than 0.25 inches/hour or with Upturned Underdrain (cubic feet)
100% RRv Credit by Volume

Bioswale Typical Dimensions (feet)	3x10	3x20	3x30	3x40	3x50	5x10	5x20	5x30	5x40	5x50	5x60	5x70	5x80	5x90	5x100	8x100	10x100
surface area (square feet)	30	60	90	120	150	50	100	150	200	250	300	350	400	450	500	800	1000
Soil Storage at 18" Depth (cubic feet)	14	29	43	58	72	24	48	72	96	120	144	168	192	216	240	384	480
Soil Storage at 24" Depth (cubic feet)	19	38	58	77	96	32	64	96	128	160	192	224	256	288	320	512	640
Soil Storage at 36" Depth (cubic feet)	29	58	86	115	144	48	96	144	192	240	288	336	384	432	480	768	960

note: table assumes a void ratio of 0.32

BIOSWALE TABLE C Bioswale Soil Storage Volumes for Infiltration Rates less than 0.25 inches/hour (cubic feet) 50% RRv Credit by Volume																	
Bioswale Typical Dimensions (feet)	3x10	3x20	3x30	3x40	3x50	5x10	5x20	5x30	5x40	5x50	5x60	5x70	5x80	5x90	5x100	8x100	10x100
surface area (square feet)	30	60	90	120	150	50	100	150	200	250	300	350	400	450	500	800	1000
Soil Storage at 18" Depth (cubic feet)	7	14	22	29	36	12	24	36	48	60	72	84	96	108	120	192	240
Soil Storage at 24" Depth (cubic feet)	10	19	29	38	48	16	32	48	64	80	96	112	128	144	160	256	320
Soil Storage at 36" Depth (cubic feet)	14	29	43	58	72	24	48	72	96	120	144	168	192	216	240	384	480
note: table assumes a void ratio of 0.32																	

7. If additional stone storage is provided below the bioswale soil, see the Supplemental Stone Storage Volume table in the Subsurface Infiltration Practice section. This storage volume is added as the third component of the bioswale practice storage volume.

Combine the bioswale RRv storage volumes (surface storage plus bioswale soil storage plus stone storage, if applicable) determined above with other GI Practices as outlined in Section 5, Design Process, and proceed with Design Process Step 4, summing treatment volumes to attain RRv Provided.

Vegetation

Vegetation commonly planted in bioswale areas includes native trees, shrubs, and other herbaceous vegetation. When developing a landscape plan, choose vegetation that can stabilize soils and tolerate the design stormwater runoff rates and volumes. Vegetation used in bioswale areas should be able to tolerate both wet and dry conditions. Use of non-clay-backed sod on any grassed bioswale side slopes is required instead of seeding.

- Develop a specific landscape/planting plan for each bioswale area.
- See Appendix D, Planting List and Example Planting Plans, for a recommended plant list and appropriate selection criteria based on GI Practice and soil depth.

Maintain

Routine operation and maintenance is essential to gain public acceptance of highly visible urban bioswale areas and ensure properly functioning. A legally binding Inspection and Maintenance Agreement shall be completed. A sample Inspection and Maintenance Checklist is included in this document.

- Perform weeding, pruning, fertilizing, and trash removal as needed to maintain appearance.
- Water the plants during drought conditions as necessary.
- To ensure proper performance, check that stormwater infiltrates properly into the soil within 48 hours after a storm.
- If excessive ponding time is observed on the surface or within the clean-out, undertake corrective measures such as inspection for soil compaction and underdrain clogging.

Examples

.

Curb cut entrance to bioswale. Photo courtesy of www.americanforests.org.

Curb cuts used to drain water from roadway to bioswale. Photo courtesy of www.indygov.org/eGov/City/DPW/SustainIndy/WaterLand/Documents/Final.pdf

A healthy and properly maintained bioswale. Photo courtesy of www.rwmwd.org.

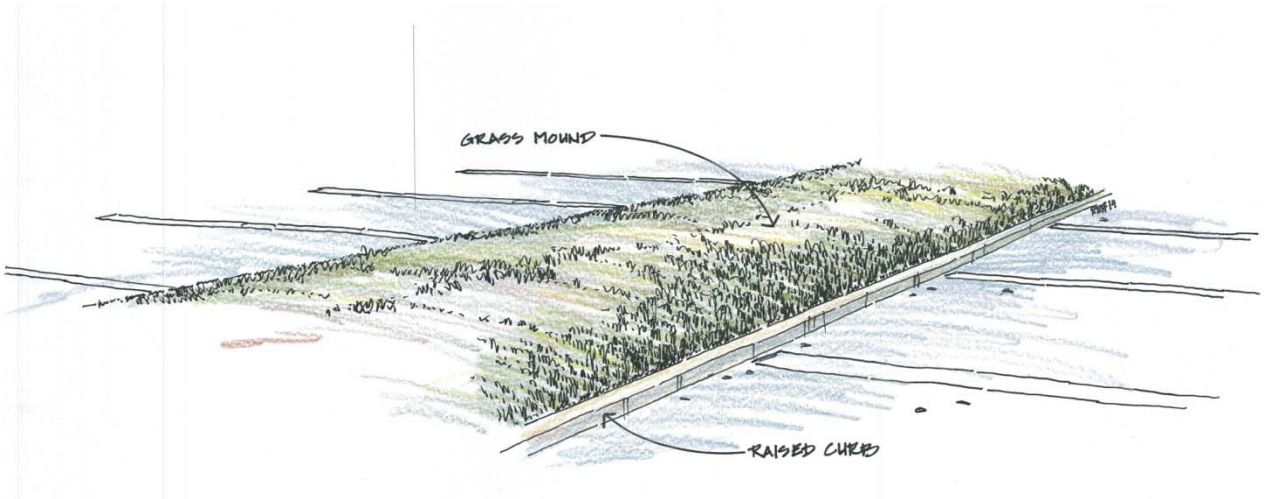

BEFORE: A typical small commercial parking lot consisting of a "mounded" landscape island planted with turf grass.

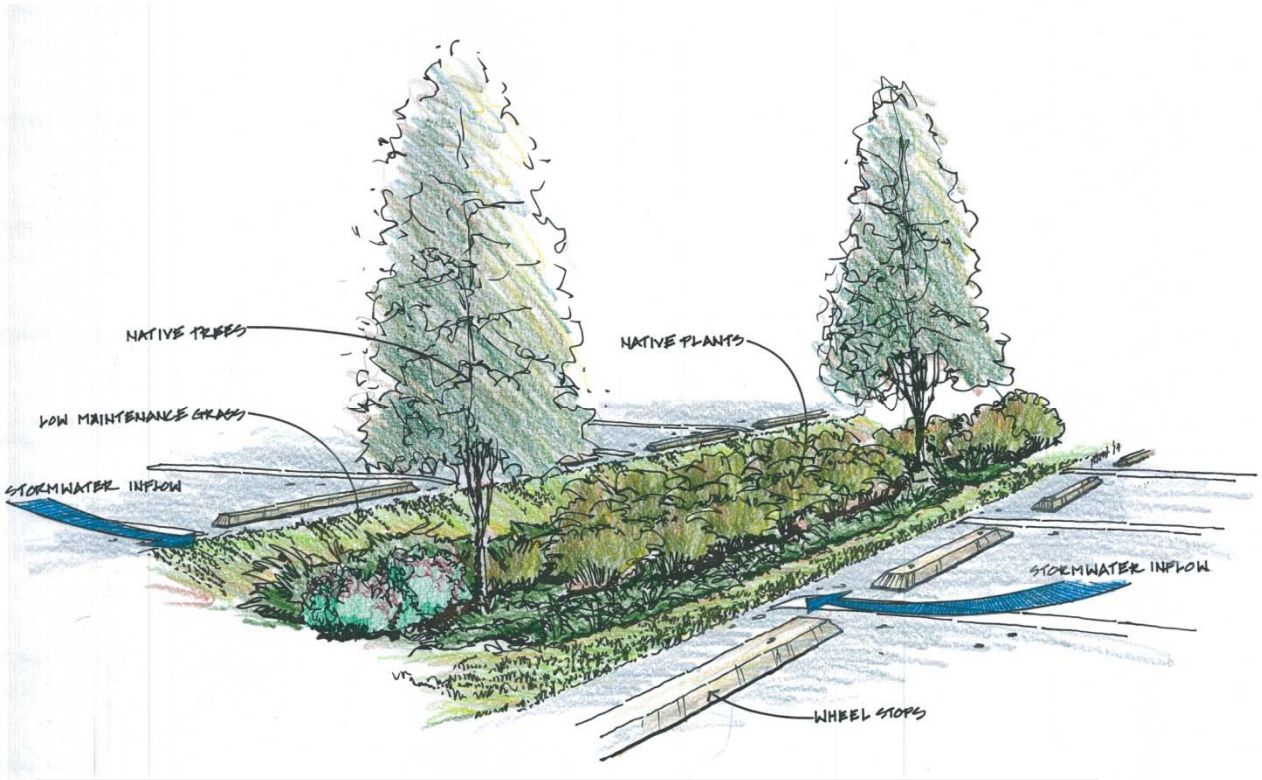

AFTER: A small commercial parking lot island converted to a bioswale utilizing sheet flow from impervious surface to a filter strip.

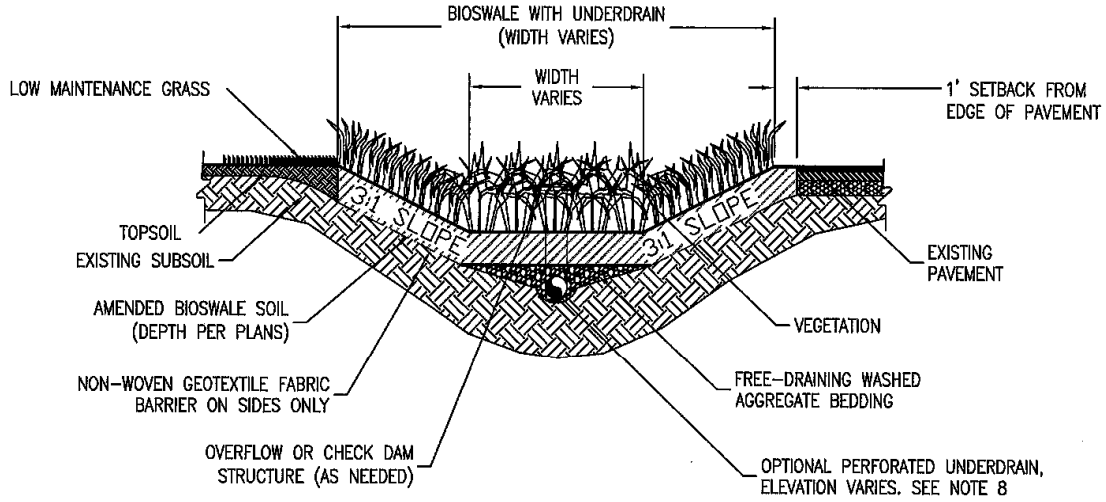

SECTION

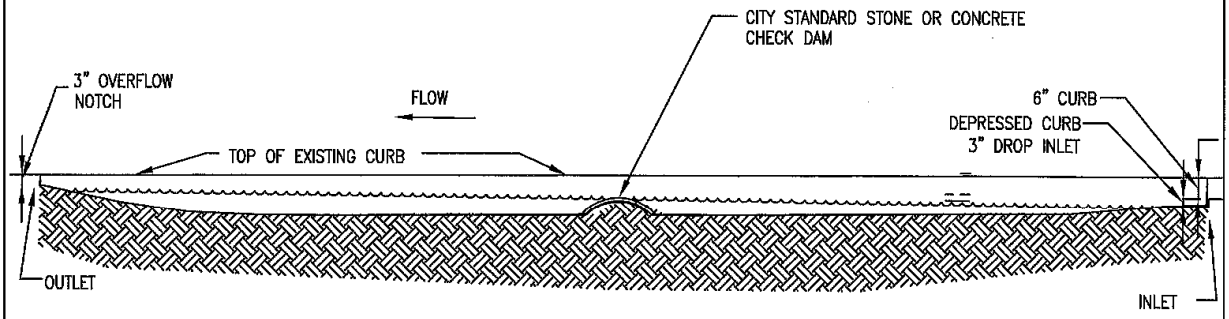

PROFILE

NOTES:

1. IF STORMWATER BIOSWALE IS CONSTRUCTED NEXT TO AN EXISTING SIDEWALK, SOIL ELEVATIONS MUST BE BROUGHT TO TOP OF CURB AND SLOPE AWAY FROM CURB AT A 4:1 SLOPE.
2. STONE CHECK DAMS SHOULD BE CONSTRUCTED OF GRADED SIZE 2–10" STONE. MECHANICAL OR HAND PLACEMENT SHALL BE REQUIRED TO ENSURE COMPLETE COVERAGE OF ENTIRE WIDTH OF BIOSWALE, AND THAT CENTER OF DAM IS LOWER THAN EDGES.
3. DURING EXCAVATION, HEAVY MACHINERY SHOULD NOT DRIVE OVER EXPOSED UNDERLYING SOILS.
4. EXCAVATE IN DRY CONDITIONS AS OFTEN AS PRACTICABLE.
5. USE TRACKED VEHICLES.
6. EXCAVATE FINAL 9"–12" WITH TEETH OF BUCKET (DO NOT SMEAR).
7. SUBSOILS SHALL BE SCARIFIED (NOT COMPACTED) PRIOR TO PLACEMENT OF CLEAN-WASHED AGGREGATE SUBBASE.
8. IF AN UNDERDRAIN IS UTILIZED, IT SHOULD TIE INTO AN UPTURNED "S" UNDERDRAIN (SEE BIOSWALE TABLE B FOR DESIGN VALUES) OR IT SHALL BE INSTALLED ON THE BOTTOM (SEE BIOSWALE TABLE C FOR DESIGN VALUES).

N.T.S.

SMALL COMMERCIAL GUIDE TYPICAL DETAILS

BIOSWALE

NOTES:

1. INFILTRATION RATE SHALL BE FIELD VERIFIED BY A CERTIFIED PROFESSIONAL. REFER TO APPENDIX C, TESTING PARAMETERS.
2. BIOSWALE SIZE TO BE DETERMINED BY A CIVIL ENGINEER. SIZE SHALL BE BASED ON VOLUME NEEDED FOR STORAGE OF RRv.
3. TYPICAL STORAGE DEPTH FOR BIOSWALE = 9". PLANTINGS SHOULD BE LOCATED ACCORDING TO THEIR WATER TOLERANCE AND ANTICIPATED FLOW DEPTH. WATER SHOULD NOT REMAIN IN BIOSWALE LONGER THAN 48 HRS.
4. GRAVEL AND PERFORATED PIPE UNDERDRAIN SYSTEM
   a. GRAVEL: 8" LAYER ASTM D448 SIZE NO. 57 WASHED STONE AND SHOULD BE SEPARATED BY A THIN 2 TO 4 INCH LAYER OF CHOKER STONE (ASTM D 448 SIZE NO. 8, 3/8" TO 1/8" OR ASTM D 448 SIZE NO. 89, 3/8" TO 1/16")
   b. PERFORATED PIPE: 4 TO 6 INCH PERFORATED PVC (AASHTO M 252), 3/8" PERFORATION SPACED 6" ON CENTER, MIN SLOPE OF 0.5% (NO SOCK PIPES SHALL BE PERMITTED)
   c. NON-WOVEN SEPARATION GEOTEXTILE UTILIZED ON THE SIDE SURFACE INTERFACES ONLY TO PREVENT SOIL MOVEMENT INTO THE SUBBASE.
5. CONNECT UNDERDRAIN PIPES TO STORM SEWER SYSTEM PER PLANS. UNDERDRAIN PIPES SHOULD BE PERFORATED OR SLOTTED AND SIZED BASED ON FLOW RATE. (6" MIN. DIA.).
6. WHERE PERMEABLE PAVEMENTS ARE USED NEAR BIOSWALES, PROTECT STONE BASE UNDER PAVEMENT WITH GEOTEXTILE FABRIC TO PREVENT SOIL MOVEMENT INTO PERMEABLE PAVEMENT BASE. SEE PERMEABLE PAVEMENT DETAIL.
7. WHERE NON-POROUS PAVEMENTS ARE USED NEAR BIOSWALES, PROTECT PAVEMENT BASE WITH IMPERVIOUS LINER TO MINIMIZE WATER MIGRATION UNDER PAVEMENT.
8. BIOSWALES SHALL NOT BE INSTALLED OVER SEPTIC TANK.
9. IF A CURB CUT IS PERFORMED, UTILIZE THE INLET – CURB CUT DETAIL.
10. INSTALL ROCK OR SPLASH BLOCK FOR CONCENTRATED FLOWS ENTERING THE BIOSWALE TO PROTECT AGAINST EROSION.
11. TO PREVENT FAILURE DUE TO SEDIMENT ACCUMULATION, SWALES SHOULD BE INSTALLED AFTER THEIR CONTRIBUTING DRAINAGE AREA (CDA) HAS BEEN COMPLETELY STABILIZED OR STORMWATER SHOULD BE DIVERTED AROUND BIOSWALE UNTIL THE CDA HAS BEEN STABILIZED.
12. EROSION AND SEDIMENT CONTROL MEASURES SHOULD BE USED TO PROTECT BIOSWALES. DIVERT POST-CONSTRUCTION STORMWATER RUNOFF AROUND BIOSWALES UNTIL VEGETATIVE COVER HAS BEEN ESTABLISHED.
13. HEAVY VEHICULAR AND FOOT TRAFFIC SHOULD BE KEPT OUT OF BIOSWALES DURING AND AFTER CONSTRUCTION TO PREVENT SOIL COMPACTION.
14. NATIVE SOILS ALONG BOTTOM OF THE BIOSWALE SHOULD BE TILLED TO 3-4" PRIOR TO PLACEMENT OF AN UNDERDRAIN AND/OR ENGINEERED SOIL MIX.
15. CONSTRUCTION CONTRACTS SHOULD CONTAIN A REPLACEMENT WARRANTY TO HELP ENSURE ADEQUATE GROWTH AND SURVIVAL OF VEGETATION PLANTED.
16. DURING EXCAVATION, HEAVY MACHINERY SHOULD NOT DRIVE OVER EXPOSED UNDERLYING SOILS.
17. EXCAVATE IN DRY CONDITIONS AS OFTEN AS PRACTICABLE.
18. USE TRACKED VEHICLES.
19. EXCAVATE FINAL 9"-12" WITH TEETH OF BUCKET (DO NOT SMEAR).
20. SUBSOILS SHALL BE SCARIFIED (NOT COMPACTED) PRIOR TO PLACEMENT OF CLEAN-WASHED AGGREGATE SUBBASE.

N.T.S.

SMALL COMMERCIAL GUIDE TYPICAL DETAILS

BIOSWALE NOTES

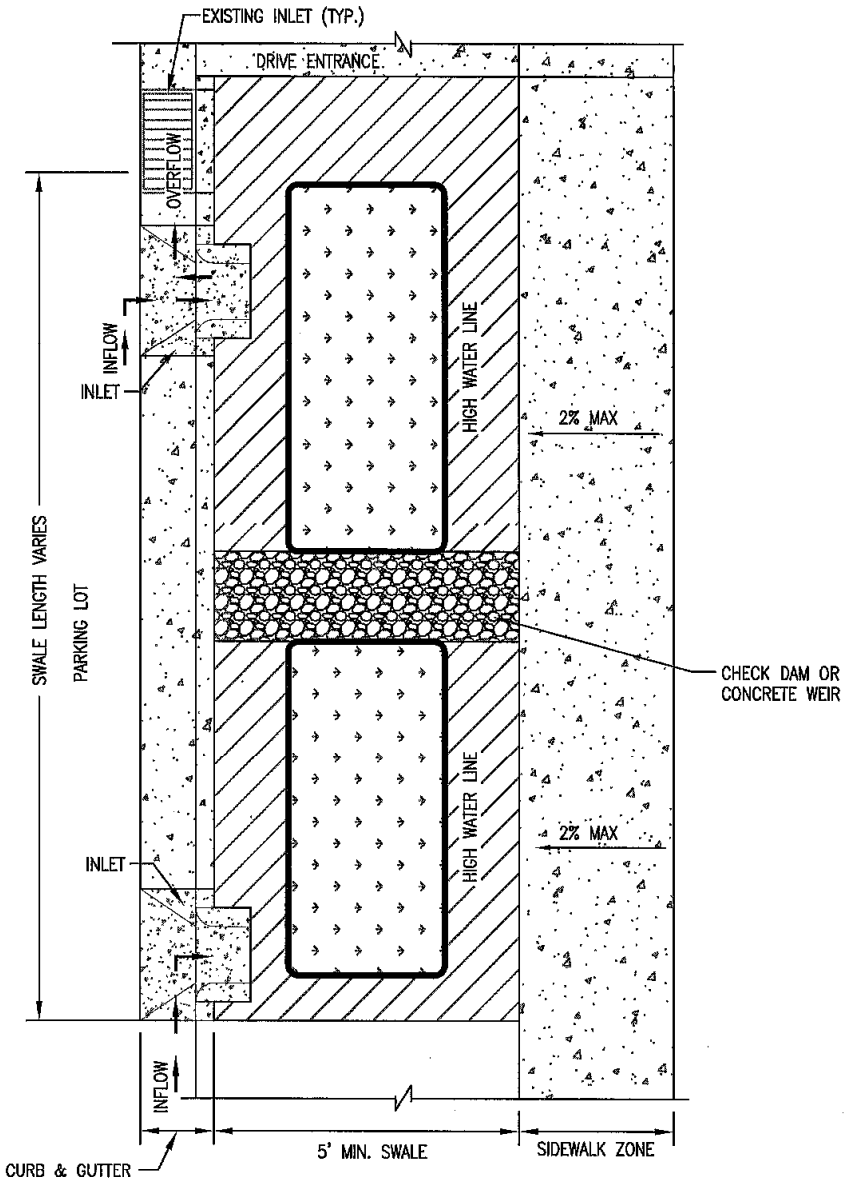

PLAN

N.T.S.

SMALL COMMERCIAL GUIDE TYPICAL DETAILS

BIOSWALE – CURB & GUTTER

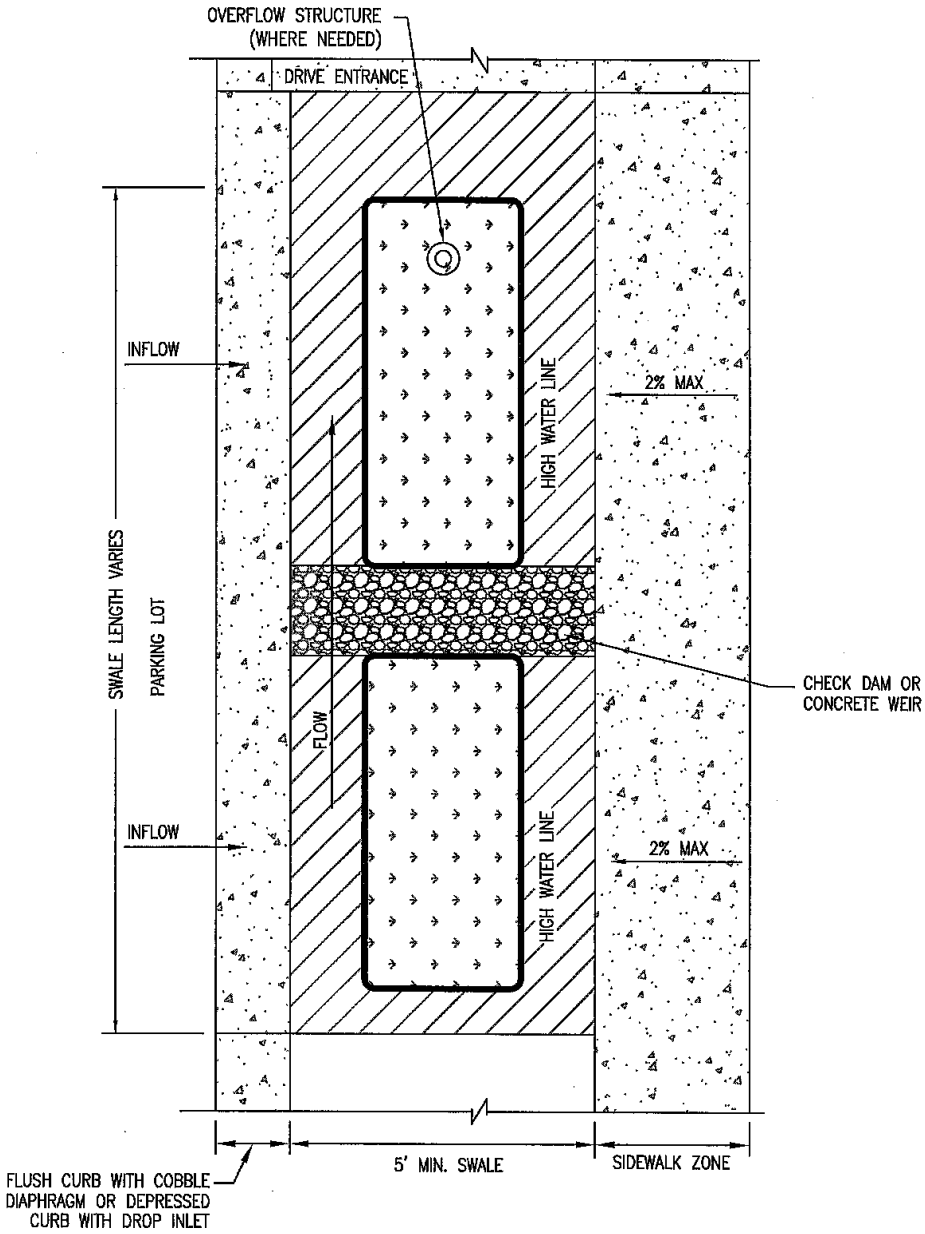

PLAN

N.T.S.

SMALL COMMERCIAL GUIDE TYPICAL DETAILS

BIOSWALE – FLUSH CURB

Sample Bioswale Inspection and Maintenance Checklist

Inspector:	
Date:	***Time:***
Weather: ***Rainfall over previous 2-3 days?***	
Swale Location:	

Mark items in the table below using the following key:

- **X** Needs immediate attention
- – Not Applicable
- ✓ Okay
- **?** Clarification Required

Bioswale Components:

Items Inspected	Checked		Maintenance Needed		Inspection Frequency
DEBRIS CLEANOUT	**Y**	**N**	**Y**	**N**	
Swale and contributing areas clean of debris.					Monthly
No dumping of yard wastes into swale.					Monthly
Litter (trash, debris, etc.) have been removed.					Monthly
VEGETATION					
Is plant composition still according to approved plans?					Monthly
No placement of inappropriate plants.					Monthly
DEWATERING AND SEDIMENTATION					
Swale dewaters between storms.					Monthly
No evidence of standing water.					Monthly
No evidence of surface clogging.					Monthly
Sediments should not be greater than 20% of swale design depth.					Monthly
OUTLETS/OVERFLOW SPILLWAY					
Good condition, no need for repair.					Annual, After Major Storm
No evidence of any blockages.					Annual, After Major Storm
INTEGRITY OF SWALE					
Swale has not been blocked or filled inappropriately.					Annual
No evidence of erosion.					Annual
Noxious plants or weeds removed.					Annual

COMMENTS:

OVERALL CONDITION OF FACILITY:

In accordance with approved design plans? Y / N *In accordance with As Built plans?* Y / N

Dimension on as built:

Field Verified Dimension:

Maintenance required as detailed above? Y / N Compliance with other conditions? Y / N

Comments: _____

_____

Dates by which maintenance must be completed: _____ /_____ /_____

Dates by which outstanding information is required: _____ /_____ /_____

Inspector's signature: _____

Engineer/Agent's signature: _____

Engineer/Agent's name printed:_____

SMALL COMMERCIAL GUIDE

CITY OF ATLANTA, GEORGIA
DEPARTMENT OF WATERSHED MANAGEMENT

PERMEABLE PAVEMENT

Permeable paver parking stalls add variety to parking lot landscape. English Park, Atlanta

Permeable pavement provides the structural support of conventional pavement, but allows stormwater to drain directly through the load-bearing surface into the underlying stone base and soils, intercepting and reducing stormwater runoff. During a rain event, stormwater flows through the porous surface, drains into the crushed stone sub-base beneath the pavement, and remains stored until stormwater can infiltrate into the soil or outlet through the underdrain. There are permeable varieties of asphalt, concrete, and interlocking pavers. Permeable pavement systems are suitable for any type of small commercial development. They are especially well-suited for parking lots, walkways, and sidewalks. Proper training of owners, users, and maintenance staff will help to prolong the life of the permeable pavement.

Location

- The location of this GI Practice is most often dictated by site design factors including building location, drive entrances, internal circulation, and landscaping requirements. Choose a location keeping these factors in mind:
  - Areas with lower traffic volumes such as parking spaces are preferable.
  - Permeable pavement is most appropriate for areas that are relatively flat (generally less than a 5% slope).
  - Avoid areas with drainage from adjacent erodible areas with the potential for heavy sediment loads.
  - Place in an area not likely to receive runoff from dumpster pads, materials storage, or process areas.
  - Do not use this practice where hazardous materials are handled or stored.
- Locate the bottom of the pavement section 2 feet above the seasonally high water table, outside the public right of way unless an appropriate maintenance agreement is completed (see Appendix E, Sample Forms), and away from utility lines, septic fields, and steep slopes.
- Provide proper waterproofing techniques (such as an impermeable liner) for permeable pavement located next to buildings; otherwise, permeable pavement shall be located 10 feet from building foundations.

Permeable concrete used in a roadway application. Felder Avenue, Atlanta

Comparison of permeable asphalt (left) with traditional asphalt surface (right) during a storm event. Photo courtesy of www.wolfpaving.com

Design

General

- Key elements of the design include:
  - A permeable surface with a high infiltration rate
  - Bedding material, if required by manufacturer's recommendations
  - An open-graded, aggregate base choker or filter course, used to stabilize the stone surface for the pavement material
  - A stone sub-base suitable for design traffic loads
  - An uncompacted, level sub-grade (to allow infiltration of stormwater)
  - Positive overflow to prevent system flooding
- Infiltration tests are required (two per GI Practice).
- Required surface area depends on the desired storage volume, but should generally not exceed a maximum loading ratio of 25% of the contributing drainage area.
- Permeable pavement can be used on most travel surfaces with slopes less than 5%.
- The depth of the stone sub-base should be designed based on stormwater management objectives, total drainage area, traffic load, and soil characteristics. At a minimum, the gravel and perforated underdrain system shall be sized to meet traffic loading requirements for the selected permeable material.
- For sloped sites, verify that the bottom of the stone sub-base is at a constant elevation or that storage calculations consider reduced storage due to the sloped bottom.
  - Use of staged storage cells in series with appropriately designed staged overflows can maximize storage on a sloped site.

Step-by-Step Sizing

1. Establish the RRv Required (in cubic feet) for the contributing impervious area using Figure 5 in Section 5, Design Process.
2. Determine the dimensions and depth of the proposed infiltration trench.
3. Confirm the site infiltration rates per infiltration testing parameters in Appendix C.

4. Use the dimensions determined in Step 2, and Table A for infiltration rates greater than 0.25 inch per hour, or Table B for infiltration rates less than 0.25 inch per hour to find the storage volume provided in the stone.

PERMEABLE PAVEMENT STONE STORAGE TABLE A
Stone Storage Volumes for Infiltration Rates greater than 0.25 inches/hour (cubic feet)
100% RRv Credit by Volume

Stone Storage Typical Dimensions (feet)	5x10	5x15	5x20	5x30	10x10	10x15	10x20	10x30	10x40	10x50	10x60	10x70	10x80	20x20	20x30	20x40	30x30
surface area (square feet)	50	75	100	150	100	150	200	300	400	500	600	700	800	400	600	800	900
Stone Storage at 12" Depth (cubic feet)	20	30	40	60	40	60	80	120	160	200	240	280	320	160	240	320	360
Stone Storage at 18" Depth (cubic feet)	30	45	60	90	60	90	120	180	240	300	360	420	480	240	360	480	540
Stone Storage at 24" Depth (cubic feet)	40	60	80	120	80	120	160	240	320	400	480	560	640	320	480	640	720
Stone Storage at 36" Depth (cubic feet)	60	90	120	180	120	180	240	360	480	600	720	840	960	480	720	960	1080
Stone Storage at 48" Depth (cubic feet)	80	120	160	240	160	240	320	480	640	800	960	1120	1280	640	960	1280	1440
note: table assumes a void ratio of 0.40																	

PEMEABLE PAVEMENT STONE STORAGE TABLE B
Stone Storage Volumes for Infiltration Rates less than 0.25 inches/hour (cubic feet)
50% RRv Credit by Volume

Stone Storage Typical Dimensions (feet)	5x10	5x15	5x20	5x30	10x10	10x15	10x20	10x30	10x40	10x50	10x60	10x70	10x80	20x20	20x30	20x40	30x30
surface area (square feet)	50	75	100	150	100	150	200	300	400	500	600	700	800	400	600	800	900
Stone Storage at 12" Depth (cubic feet)	10	15	20	30	20	30	40	60	80	100	120	140	160	80	120	160	180
Stone Storage at 18" Depth (cubic feet)	15	23	30	45	30	45	60	90	120	150	180	210	240	120	180	240	270
Stone Storage at 24" Depth (cubic feet)	20	30	40	60	40	60	80	120	160	200	240	280	320	160	240	320	360
Stone Storage at 36" Depth (cubic feet)	30	45	60	90	60	90	120	180	240	300	360	420	480	240	360	480	540
Stone Storage at 48" Depth (cubic feet)	40	60	80	120	80	120	160	240	320	400	480	560	640	320	480	640	720
note: table assumes a void ratio of 0.40																	

Pretreatment

- Contributing drainage areas should have proper pretreatment design to filter debris and sediment that may clog the permeable pavement system. Appropriate pretreatment measures can be found in Appendix B, Supplemental Green Infrastructure Practice Details, and include:
  - A grass filter strip
  - Forebay
  - A river cobble diaphragm or thick filtering vegetation

Outflow-Regulating Structure

- Because of inconsistent infiltration conditions on smaller commercial sites, incorporate an upturned underdrain system that consists of washed gravel and perforated pipe (see Appendix B, Supplemental Green Infrastructure Practice Details) to provide an easier way to tie into the existing stormwater infrastructure and additional storage and increased infiltration. The design should include:
    - Aggregate: 8-inch layer ASTM D448 Size No. 57 washed stone and should be separated by a thin 2- to 4-inch layer of choker stone (ASTM D 448 size No. 8, 3/8-inch to 1/8-inch or ASTM D 448 size No. 89, 3/8 inch to 1/16 inch)
    - Perforated pipe: 4- to 6-inch perforated PVC (AASHTO M 252), 3/8-inch perforation spaced 6 inches on center, minimum slope of 0.5% (no sock pipes shall be permitted)
    - Nonwoven separation geotextile utilized on the side surface interfaces ONLY
- Upturned “S” solid underdrain pipe below the bottom of the surface may be used to receive full RRv credit.
- Native soils along the bottom of the permeable pavement system should be tilled or scarified to 3 to 4 inches prior to placement of choker stone.
- No mulch or landscaping material shall be stored on the pavement areas.
- Pavement should be tested after construction for adequate infiltration.
    - Make sure the permeable pavement surface is even, runoff evenly spreads across it, and the storage bed drains within 48 hours.

Maintain

Permeable pavement systems require regular maintenance to extend their life. A legally binding Operation and Maintenance Agreement should be created. A sample Inspection and Maintenance Checklist is included in this document.

- Pavement should be inspected to ensure it is clear of sediment and debris post-construction, annually, and after large storm events.
- Vacuum-sweep the permeable pavement surface annually.
- Dirt and sediment that is ground in repeatedly by tires can lead to clogging. Trucks or other heavy vehicles should be prevented from tracking or spilling dirt onto the pavement.
- Inspect for deterioration or spalling annually and rehabilitate the system per O&M guidelines.
- All construction or hazardous materials carriers should be prohibited from entering a permeable pavement lot.
- During winter, abrasives such as sand or cinders shall not be applied on or adjacent to the permeable pavement.
- Salt is not recommended for use as a de-icer on permeable pavement. Nontoxic, organic de-icers applied either as blended, magnesium chloride-based liquid products or as pretreated salt are preferable. De-icing materials should be used in moderation.

Fine aggregate allows water to infiltrate in gaps between interlocking pavers. Pavers are well-suited to plazas, patios, and small parking areas where aesthetics are important. Photo courtesy of www.nrdc.org.

Permeable asphalt (first developed in the 1970s) consists of standard bituminous asphalt in which fines have been screened and reduced, allowing water to pass through small voids. Photo courtesy of www.socwisconsin.org.

Examples

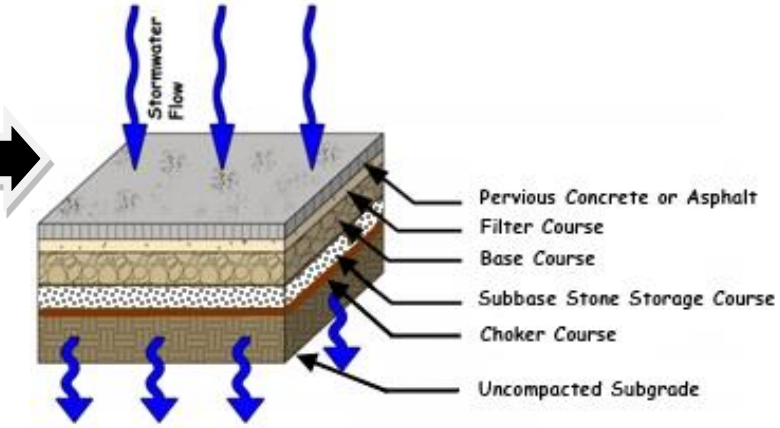

Permeable concrete can be easily integrated into site design and looks similar to traditional concrete.

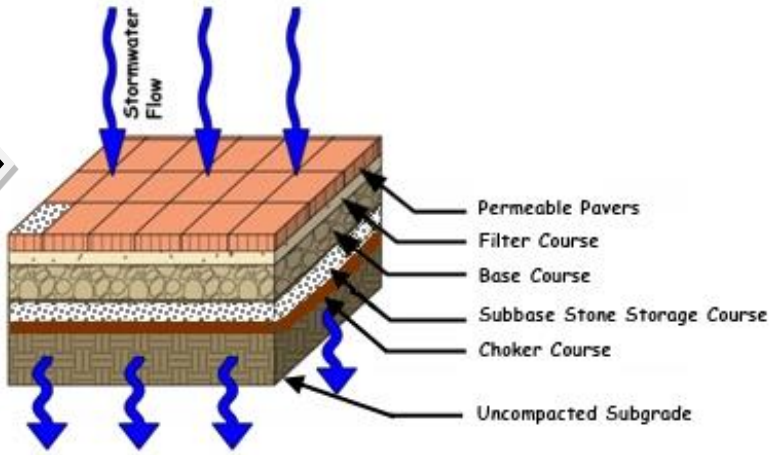

Permeable pavers add aesthetic value to the design of a site.

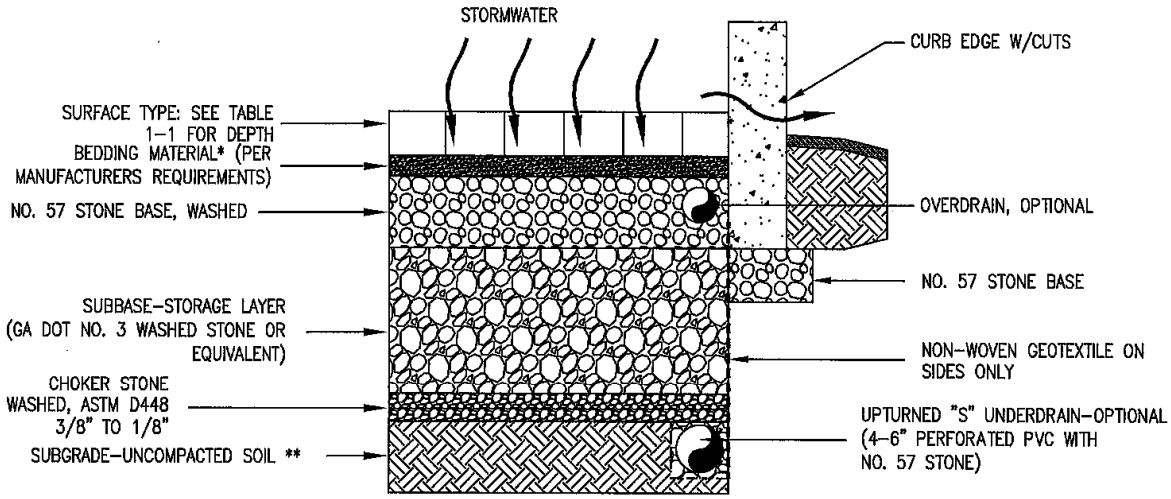

PERMEABLE PAVEMENT SYSTEM

NOTE: WHERE NATIVE SOILS HAVE AN INFILTRATION RATE < 0.25 IN/HR AN UNDERDRAIN IS REQUIRED. UPTURNED "S" UNDERDRAIN SHALL BE USED TO RECEIVE RRv CREDIT FOR RUNOFF CAPTURE AND STORAGE. STONE STORAGE LAYER SHALL DRAIN WITHIN 48 HOURS.

TABLE 1-1

DEPTH REQUIRED FOR EACH LAYER

SURFACE TYPE	SURFACE***	BEDDING MATERIAL	BASE	CHOKER	UNDERDRAIN
PERVIOUS CONCRETE	4-8"	N/A	6"	2-4"	4"-6"
PERVIOUS ASPHALT	3-7"	N/A	6"	2-4"	4"-6"
INTERLOCKING PAVERS	1.5-3"	2"	6"	2-4"	4"-6"
CONCRETE GRID PAVERS	3.5"	1-1.5"	6"	2-4"	4"-6"
PLASTIC GRID PAVERS	3.5"	1-1.5"	6"	2-4"	4"-6"

SUBBASE DEPTH MUST EXCEED MANUFACTURER'S MINIMUM FOR TRAFFIC LOADING DESIGN. ADDITIONAL DEPTH FOR STORAGE AS NEEDED

* CONCRETE AND ASPHALT SURFACE TYPES DO NOT REQUIRE BEDDING MATERIAL.
** MINIMIZE COMPACTION OF SUBGRADE SOILS. SCARIFY OR TILL SUBGRADE TO A DEPTH OF 3-4".
*** PERMEABLE PAVEMENT SURFACE MUST BE ABLE TO SUPPORT THE MAXIMUM PROJECTED TRAFFIC LOAD.

N.T.S.

SMALL COMMERCIAL GUIDE TYPICAL DETAILS

PERMEABLE PAVEMENT

NOTES:

1. DIMENSIONS LISTED ARE MINIMUMS. DESIGNER MUST VERIFY PAVEMENT DEPTH.
2. MINIMUM STONE BASE DEPTH = 6" NO. 57 STONE, WASHED, OR OTHER APPROVED MATERIAL.
3. COMPACTION TO BE MINIMUM REQUIRED FOR STABLE BASE TO ENSURE INFILTRATION CAPACITY. ENGINEER TO SPECIFY REQUIREMENTS BASED ON SITE CONDITIONS AND GEOTECHNICAL REPORT.
4. UPTURNED "S" UNDERDRAIN SHALL BE USED TO RECEIVE RRv CREDIT FOR RUNOFF CAPTURE AND STORAGE. STONE STORAGE LAYER SHALL DRAIN WITHIN 48 HOURS.
5. INFILTRATION RATE SHALL BE FIELD VERIFIED BY CERTIFIED PROFESSIONAL. REFER TO THE CITY OF ATLANTA STORMWATER MANAGEMENT PRACTICES FOR SMALL COMMERCIAL DEVELOPMENT – APPENDIX C – INFILTRATION TESTING PARAMETERS.
6. USE NON-WOVEN GEOTEXTILE FABRIC ON SIDES OF STONE STORAGE LAYER.
7. PERMEABLE PAVEMENT SYSTEM MUST BE CLEARLY MARKED ON DEVELOPMENT PLAN AND A NOTE TO PROTECT WITH TEMPORARY CONSTRUCTION FENCING.
8. EXCAVATION MUST BE CONSTRUCTED TO SPECIFIED WIDTH AND DEPTH OF PERMEABLE PAVEMENT SYSTEM, STOCKPILED MATERIAL SHOULD BE CLEARLY STORED AWAY FROM EXCAVATION.
9. NATIVE SOILS ALONG BOTTOM OF THE PERMEABLE PAVEMENT SYSTEM SHOULD BE TILLED OR SCARIFIED TO 3–4" PRIOR TO PLACEMENT OF CHOKER STONE.
10. SIDES OF EXCAVATIONS MUST BE TRIMMED OF LARGE ROOTS THAT WILL HAMPER INSTALLATION OF FILTER FABRIC AROUND THE STONE STORAGE.
11. WHEN USING PORTLAND CEMENT PERVIOUS CONCRETE (PCPC), THE PAVEMENT SHALL REMAIN COVERED FOR 7 DAYS DURING THE CURING PERIOD. NOT REQUIRED FOR PAVERS OR POROUS ASPHALT.
    a. DURING THIS TIME IT IS CRITICAL THAT ANY STORMWATER BE DIVERTED AWAY FROM THE PAVEMENT.
12. ADEQUATE EROSION CONTROL MUST BE PROVIDED. SEDIMENT LADEN STORMWATER SHALL NOT BE ALLOWED TO FLOW IN THE PERMEABLE PAVEMENT AREA.
13. NO MULCH OR LANDSCAPING STORAGE SHALL BE ALLOWED ON THE PAVEMENT AREAS.
14. PERMEABLE PAVEMENT MUST BE TESTED AFTER CONSTRUCTION. AFTER PLACEMENT AND APPROPRIATE CURING OF STRUCTURAL PAVEMENT SURFACE (7 DAYS FOR PERVIOUS CONCRETE AND 48 HOURS MINIMUM FOR POROUS ASPHALT HARDENING), TEST INFILTRATION ABILITY BY APPLYING CLEAN WATER AT A RATE OF AT LEAST 5 GPM OVER SURFACE. THE WATER APPLIED TO THE SURFACE SHOULD INFILTRATE WITHOUT CREATING PUDDLES OR RUNOFF.
17. DURING EXCAVATION, HEAVY MACHINERY SHOULD NOT DRIVE OVER EXPOSED UNDERLYING SOILS.
18. EXCAVATE IN DRY CONDITIONS AS OFTEN AS PRACTICABLE.
19. USE TRACKED VEHICLES.
20. EXCAVATE FINAL 9"–12" WITH TEETH OF BUCKET (DO NOT SMEAR).
21. SUBSOILS SHALL BE SCARIFIED (NOT COMPACTED) PRIOR TO PLACEMENT OF CLEAN-WASHED AGGREGATE SUBBASE.
22. GRAVEL BASE SHOULD BE COMPACTED WITH A 10 TON ROLLER UNTIL THERE IS NO VISIBLE MOVEMENT.

N.T.S.

SMALL COMMERCIAL GUIDE TYPICAL DETAILS

PERMEABLE PAVEMENT

Sample Permeable Pavement Inspection and Maintenance Checklist

Inspector:	
Date:	***Time:***
Weather: ***Rainfall over previous 2-3 days?***	
Permeable Pavement Location:	

Mark items in the table below using the following key:

- **X** Needs immediate attention
- – Not Applicable
- ✓ Okay
- **?** Clarification Required

Permeable Pavement Components:

Items Inspected	Checked		Maintenance Needed		Inspection Frequency
DEBRIS CLEANOUT	**Y**	**N**	**Y**	**N**	
Permeable Pavement and contributing areas clean of debris.					Monthly
No dumping of yard wastes onto permeable surface.					Monthly
Litter (trash, debris, etc.) have been removed.					Monthly
DEWATERING AND SEDIMENTATION					
Permeable Pavement dewaters between storms.					After Major Storm
No evidence of standing water.					After Major Storm
No evidence of surface clogging.					After Major Storm
OUTLETS/OVERFLOW SPILLWAY					
Good condition, no need for repair.					Annually, After Major Storm
No evidence of erosion.					
No evidence of any blockages.					
INTEGRITY OF SYSTEM					
Permeable Pavement has not been blocked or filled inappropriately.					Annually
No evidence of spalling or other pavement failure.					Annually

COMMENTS:

OVERALL CONDITION OF FACILITY:

In accordance with approved design plans? Y / N *In accordance with As Built plans?* Y / N

Dimension on as built:

Field Verified Dimension:

Maintenance required as detailed above? Y / N Compliance with other conditions? Y / N

Comments: _____

_____

Dates by which maintenance must be completed: _____ /_____ /_____

Dates by which outstanding information is required: _____ /_____ /_____

Inspector's signature: _____

Engineer/Agent's signature:

Engineer/Agent's name printed: _____

SMALL COMMERCIAL GUIDE

CITY OF ATLANTA, GEORGIA
DEPARTMENT OF WATERSHED MANAGEMENT

STORMWATER PLANTERS

Stormwater planters are contained landscape areas designed to receive stormwater runoff from paved surfaces. Stormwater planters consist of a planter box that can either be lined or unlined, filled with an engineered soil mix and planted with trees, perennials, and shrubs. The top of the soil in the planter is lower in elevation than the surrounding pavement to allow runoff to flow into the planter. An underdrain is used when necessary to route excess runoff to the storm drain system. Stormwater planters manage stormwater by providing storage, infiltration, and evapotranspiration of runoff.

Stormwater planters receive runoff from relatively small drainage areas (< 2,500 sq-ft). Photo courtesy of www.portlandoregon.gov.

Location

- On small commercial sites, stormwater planters are best used where space is limited, within parking lots and adjacent to buildings or as a buffer between the street and sidewalk.
- Choose a location keeping these factors in mind:
  - Identify favorable infiltration areas on the site.
  - Identify areas that drain stormwater runoff primarily from impervious surfaces.
  - Avoid areas with drainage from adjacent erodible areas and a high potential for heavy sediment loads.
  - Place in an area not likely to receive runoff from dumpster pads, materials storage, or process areas.
  - Utilize reconfigured parking spaces, landscape beds, and buffer yards.
  - Level the area to ensure that runoff is evenly distributed over the surface area.
  - Avoid possible conflicts with site or building utilities.
  - Consider aesthetics.
- Locate 2 feet above the seasonally high water table, outside the public right-of-way unless an appropriate maintenance agreement is completed, and away from utility lines, septic fields, and steep slopes.
- For sloped sites, verify that the bottom of the planter is at a constant elevation or that storage calculations take into consideration reduced storage due to the sloped bottom.
  - Use of flow-through planters in series with appropriately designed staged overflows can maximize storage on a sloped site.
- Subsurface infiltration should be located at least 5 feet from building foundations and 10 feet from buildings with basements and property lines, and away from potable water wells or public

roadway subgrade unless the design includes proper waterproofing techniques (such as an impermeable liner).

- Subsurface soils need to be appropriately loosened and tilled to enhance infiltration characteristics.
- Proper waterproofing techniques or an impermeable liner are necessary for planters located next to buildings, in highly urban areas within utility easements, in soils with poor infiltration rates, in areas with a high water table, and above contaminated soils.
    - Infiltration is not appropriate for sites with contaminated soils, because it could impact pollutant migration.

Design

General

- The geometric design of subsurface infiltration is usually dictated by other site elements such as buildings, sidewalk widths, utility corridors, and retaining walls.
- Key elements of the design include:
    - An inlet or opening in the curb to direct stormwater into the planter
    - Concrete or prefabricated walls that form the vertical sides of the planter
    - Planter bioretention soils of an appropriate depth to support planned landscape plants and/or trees. The minimum depth is 24 inches, and 36 inches is required where trees are specified.
    - A stone drainage bed for stormwater storage and infiltration, separated from the bioretention soil above and the subgrade below with a choker stone course or filter fabric.
    - An uncompacted, level sub-grade (to allow infiltration of stormwater)
    - Overflow outlet to prevent system flooding
    - Underdrain or upturned overflow pipe in poor soil conditions
    - Impermeable liner in conditions that do not allow for infiltration.
    - Optional check dams for sloped beds
- Waterproofed or lined planters will receive credit for 50% of the storage provided to meet the RRv.
- The length of flow path of the contributing drainage area should be less than:
    - 150 feet for pervious drainage areas
    - 75 feet for impervious drainage areas
- If flow path length cannot be met, then bioretention is recommended.

Step-by-Step Sizing

1. Verify the RRv Required (in cubic feet) for the site as outlined in Section 5, Design Process.

2. Determine the total planter surface area (in square feet) by summing each area identified on the concept plan.

   Storage Volume for planters is made up of two or three components calculated individually and then summed: surface storage, planter soil storage, and (optionally) storage in a deeper stone layer.

3. Confirm the site infiltration rates per infiltration testing parameters in Appendix C.

4. Use Table A and the surface area determined in Step 2 to find the surface storage volume for the intended design ponding depth. Alternatively, calculate the storage volume from the Step 2 surface area total by multiplying depth times surface area. The maximum allowable ponding depth for planters is 12 inches.

STORMWATER PLANTER TABLE A

Planter Surface Storage Volumes (cubic feet)

Planter Typical Dimensions (feet)	5x10	5x15	5x20	5x30	10x10	10x15	10x20	10x30	10x40	10x50	10x60	10x70	10x80	20x20	20x30	20x40	30x30
surface area (square feet)	50	75	100	150	100	150	200	300	400	500	600	700	800	400	600	800	900
Surface Storage at 6" Depth (cubic feet)	25	38	50	75	50	75	100	150	200	250	300	350	400	200	300	400	450
Surface Storage at 9" Depth (cubic feet)	38	56	75	113	75	113	150	225	300	375	450	525	600	300	450	600	675
Surface Storage at 12" Depth (cubic feet)	50	75	100	150	100	150	200	300	400	500	600	700	800	400	600	800	900

5. Optional use of the upturned pipe underdrain as shown in Appendix B, Supplemental Green Infrastructure Practice Details, will allow for 100% RRv credit to be taken for the storage volume within the planter practice for soils with less than 0.25 inch/hr infiltration or for planters with an impermeable liner.

STORMWATER PLANTER TABLE B

Planter Bioretention Soil Storage Volumes for Infiltration Rates greater than 0.25 inches/hr or with Upturned Underdrain (lined or unlined)

100% RRv Credit by Volume

Planter Typical Dimensions (feet)	5x10	5x15	5x20	5x30	10x10	10x15	10x20	10x30	10x40	10x50	10x60	10x70	10x80	20x20	20x30	20x40	30x30
surface area (square feet)	50	75	100	150	100	150	200	300	400	500	600	700	800	400	600	800	900
Soil Storage at 24" Depth (cubic feet)	32	48	64	96	64	96	128	192	256	320	384	448	512	256	384	512	576
Soil Storage at 36" Depth (cubic feet)	48	72	96	144	96	144	192	288	384	480	576	672	768	384	576	768	864
Soil Storage at 48" Depth (cubic feet)	64	96	128	192	128	192	256	384	512	640	768	896	1024	512	768	1024	1152

note: table assumes a void ratio of 0.32

6. To find the storage volume in the planter bioretention soil, use the typical dimensions or surface area determined in Step 2 and Table B for infiltration rates greater than 0.25 inch/hour or a planter with an upturned pipe underdrain, or Table C for infiltration rates less than 0.25 inch/hour without an underdrain or with an impermeable liner. Interpolate as necessary.

STORMWATER PLANTER TABLE C Planter Bioretention Soil Storage Volumes for Infiltration Rates less than 0.25 inches/hr or with Impermeable Liner (cubic feet) 50% RRv Credit by Volume																	
Planter Typical Dimensions (feet)	5x10	5x15	5x20	5x30	10x10	10x15	10x20	10x30	10x40	10x50	10x60	10x70	10x80	20x20	20x30	20x40	30x30
surface area (square feet)	50	75	100	150	100	150	200	300	400	500	600	700	800	400	600	800	900
Soil Storage at 24" Depth (cubic feet)	16	24	32	48	32	48	64	96	128	160	192	224	256	128	192	256	288
Soil Storage at 36" Depth (cubic feet)	24	36	48	72	48	72	96	144	192	240	288	336	384	192	288	384	432
Soil Storage at 48" Depth (cubic feet)	32	48	64	96	64	96	128	192	256	320	384	448	512	256	384	512	576
note: table assumes a void ratio of 0.32																	

7. If additional stone storage is provided below the bioretention soil, see the Stone Storage Volume table in the Subsurface Infiltration Practice Section. This storage volume is added as the third component of the stormwater planter practice storage volume.
8. Combine the stormwater planter RRv storage volumes (surface storage plus planter soil storage plus stone storage, if applicable) determined above with other practices as outlined in Section 5, Design Process, and proceed with Design Process Step 4 summing treatment volumes to attain the RRv Provided.

Inlet/Flow-Regulating Structures and Pretreatment Elements

Specific inlet types and energy dissipation upstream of the planter area are recommended to filter out sediment, trash, floatables, and pollutants.

Stormwater planters can be integrated into a highly urban area and provide aesthetic appeal.

- The following inlet types are recommended. For sizing and design information see Appendix B, Supplemental Green Infrastructure Practice Details.
  - Sheet flow off a depressed curb with a 3-inch drop
  - Curb cuts into the planter area
  - Grates or trench drains that convey flows across a sidewalk from the curb or downspouts
- The following forms of pretreatment and energy dissipation are recommended. For sizing and design information see Appendix B, Supplemental Green Infrastructure Practice Details.
  - Grass filter strip
  - Forebay
  - River cobble diaphragm or thick filtering vegetation

Temporary Surface Storage (Ponding)

- Surface ponding depth can range from 6 inches to 12 inches (9 inches is suggested).
- A maximum drain-down time of 48 hours is required for the planter.
- In areas with steeper slopes, the addition of a check dam works to slow the runoff which allows increased infiltration. Check dams can be placed in series to increase their effectiveness.

- Allow a minimum 2 inches of freeboard between the elevation of the maximum ponding depth and top of planter.

If a liner is used, only 50% RRv credit will be provided for surface ponding storage.

Engineered Soil Mix Planting Bed

- Use an appropriate mulch layer (2 to 4 inches of fine, shredded hardwood) and avoid lighter mulch material that may float. Pea gravel can be used as an alternative to mulch.
- Install an appropriate engineered soil mix at a minimum depth of 18 inches for plants and a minimum of 3 feet for trees. Protect soil from being compacted by construction traffic during or after placement. Alternate engineered soil mixes will be considered with appropriate tests and documentation.
    - Texture: Sandy loam or loamy sand
    - Sand Content: 60%–70% clean, washed sand (dry weight basis)
    - Clay: Not greater than 10% (dry weight basis)
    - Topsoil: 8%–12% (dry weight basis)
    - Compost: 5%–10% (dry weight basis)
    - Infiltration Rate: 0.5 inch/hour minimum, preferred 1-2 inch/hour
- Protect the bottom of the planter from compaction during construction, or till soils to a depth of 6 inches to counteract compaction prior to planter soil placement. Tilling 3 inches of sand into the bottom is another acceptable method of counteracting compaction.

Outflow-Regulating Structure

Because of inconsistent infiltration on smaller commercial sites, incorporate an upturned underdrain system that consists of washed gravel and perforated pipe to provide a way to tie into the existing stormwater infrastructure and additional storage and increased infiltration. The design should include:

- 4- to 6-inch-diameter, perforated PVC pipe (AASHTO M252)
- Upturned solid pipe 12 to 18 inches below the bottom of the soil surface
- Engineering considerations shall be provided to prevent stormwater backup on streets.

Vegetation

Vegetation commonly planted in stormwater planter areas includes shrubs, herbaceous vegetation, and sometimes native trees. When developing a landscape plan, choose vegetation that will be able to stabilize soils and tolerate the stormwater runoff rates and volumes that will pass through.

See Appendix D, Planting List and Example Planting Plans, for a recommended plant list and appropriate selection criteria based on GI Practice and soil depth.

Maintain

Routine operation and maintenance is essential to gain public acceptance of highly visible urban stormwater planter areas and ensure proper functioning. A legally binding Inspection and Maintenance Agreement shall be completed. A sample Inspection and Maintenance Checklist is included in this document.

- Weeding, pruning, and trash removal should be done as needed to maintain aesthetics for community acceptance.
- During drought conditions, it may be necessary to water the plants, as would be the case with any landscaped area.
- To ensure proper performance, inspectors should check that stormwater infiltrates properly into the soil within 48 hours after a storm.
- If excessive ponding is observed, corrective measures include inspection for soil compaction and underdrain clogging.

Examples

Stormwater planters may be equipped with waterproof liners to prevent damage to building foundations. Photo courtesy of www.ci.oswego.or.us

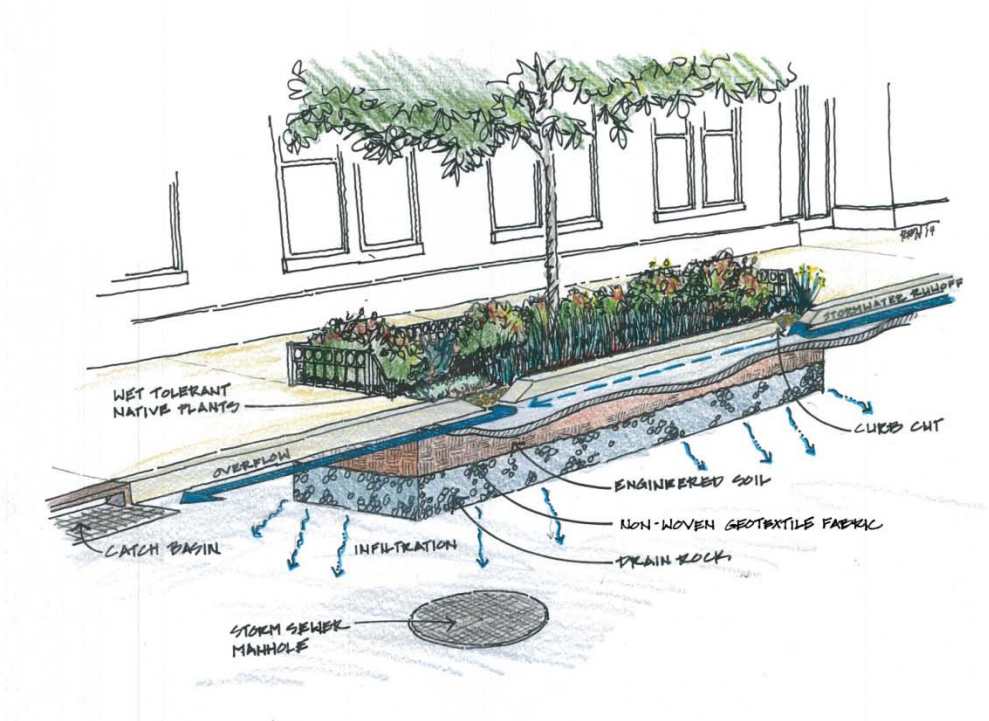

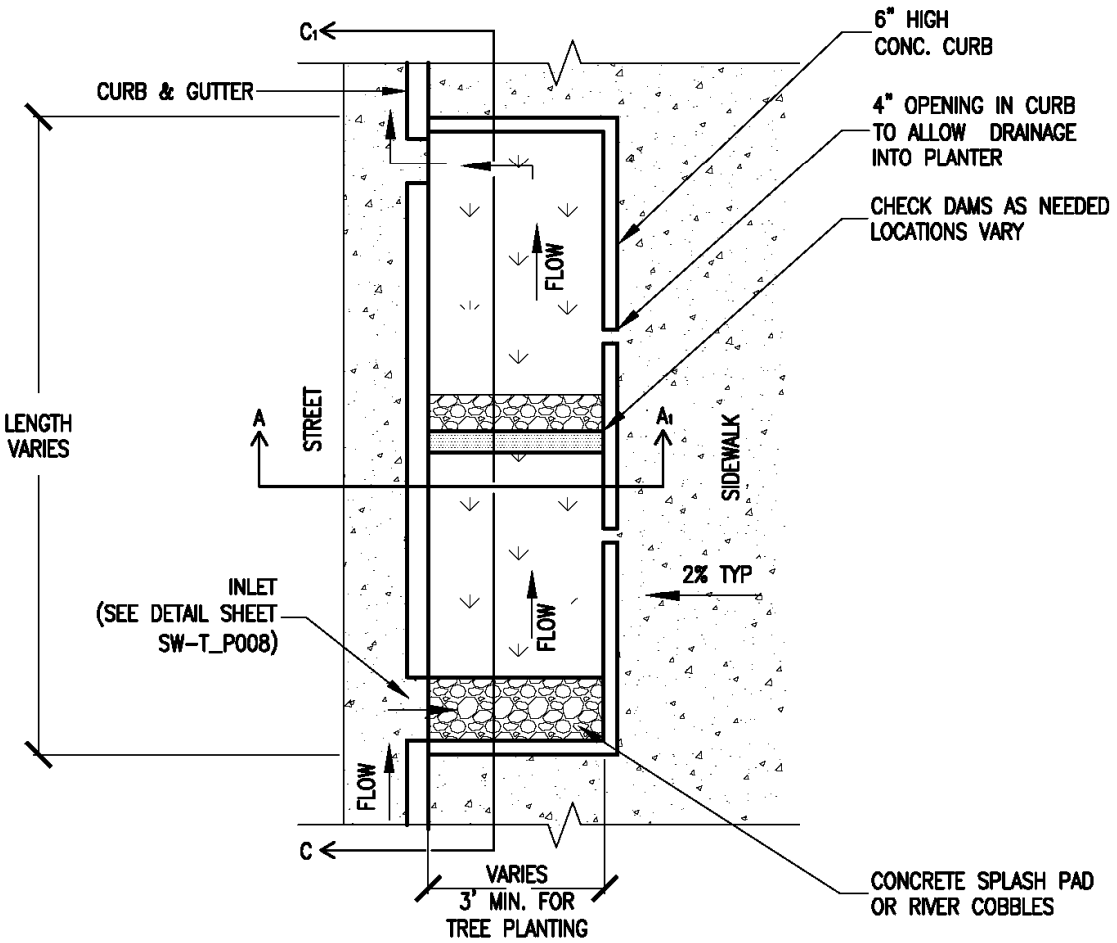

SEE SHEETS SW-T_P003 AND SW-T_P004 FOR SECTIONS

THIS DETAIL WAS TAKEN FROM THE CITY OF ATLANTA'S WEBSITE. IT MAY HAVE BEEN MODIFIED AND SHOULD BE REVIEWED THOROUGHLY.

City of Atlanta	STANDARD DETAILS	REV. DATE: APRIL 2012 ORIG. DATE: SCALE: N.T.S.
	STORMWATER PLANTER NO ON-STREET PARKING	DETAIL NO. SW-T_P001

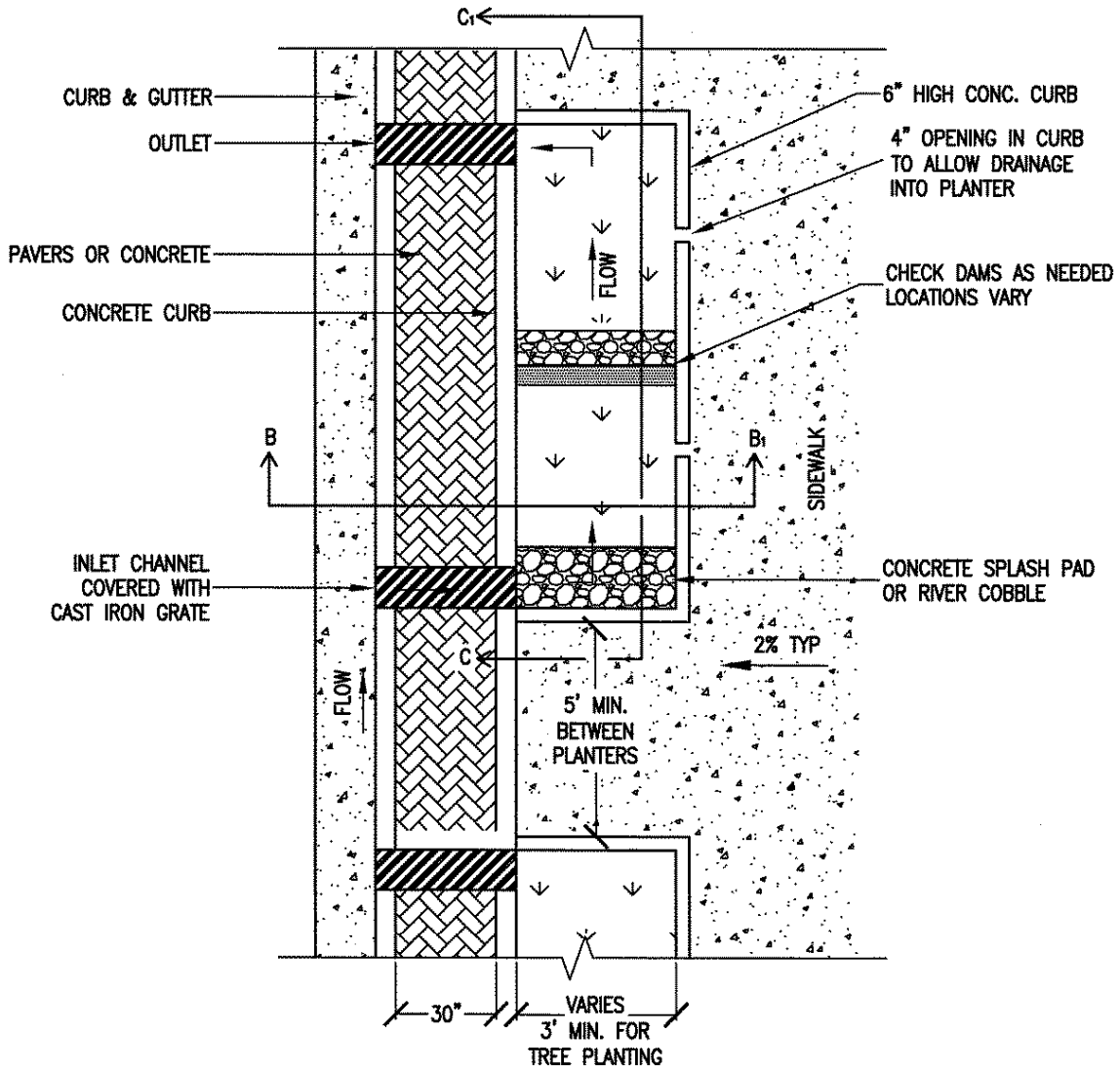

SEE SHEETS SW-T_P003 AND SW-T_P004 FOR SECTIONS

THIS DETAIL WAS TAKEN FROM THE CITY OF ATLANTA'S WEBSITE. IT MAY HAVE BEEN MODIFIED AND SHOULD BE REVIEWED THOROUGHLY.

City of Atlanta	STANDARD DETAILS	REV. DATE: APRIL 2012 ORIG. DATE: SCALE: N.T.S.
	STORMWATER PLANTER WITH ON-STREET PARKING	DETAIL NO.SW-T_P002

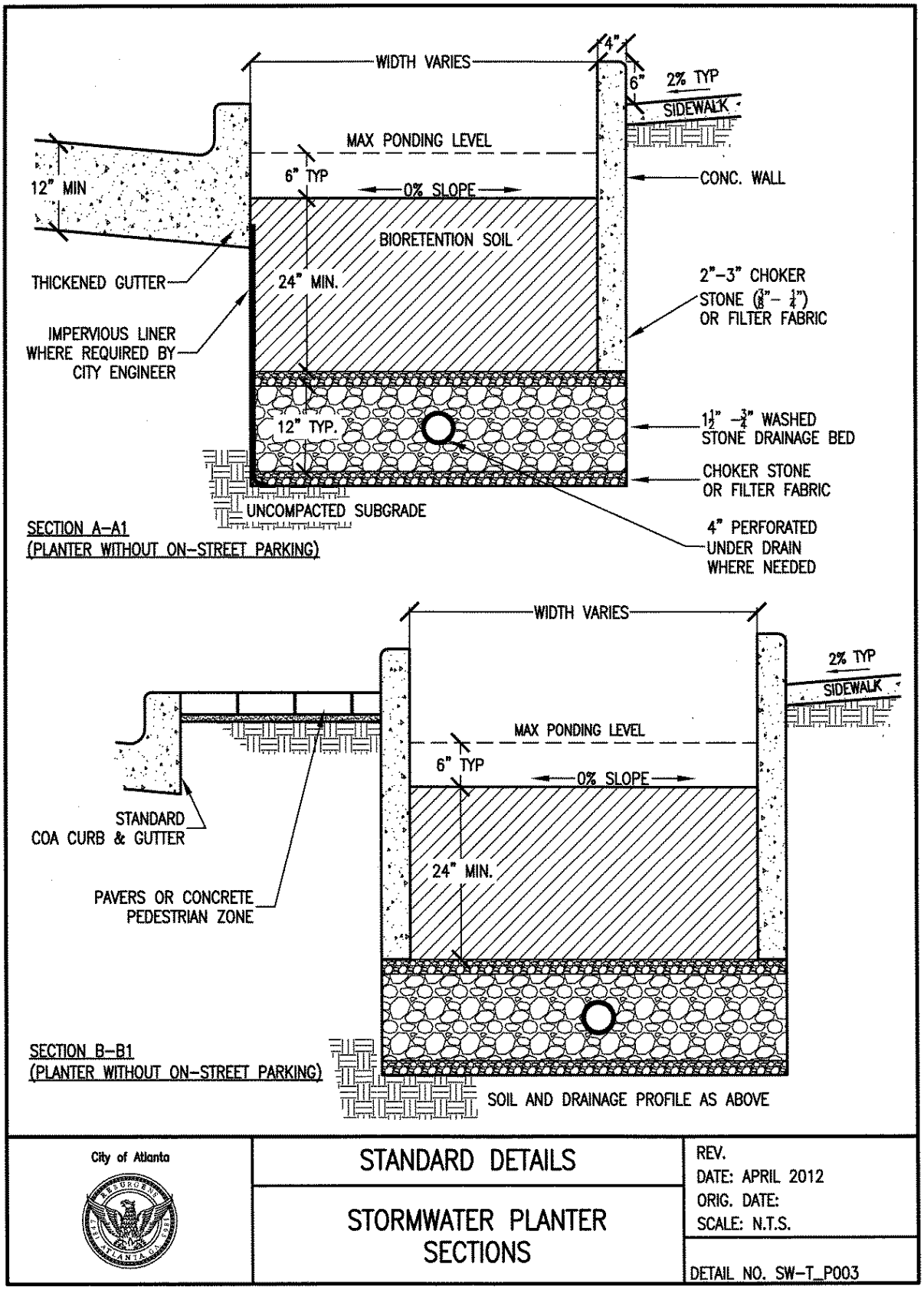
WIDTH VARIES
4"
6"
2% TYP
SIDEWALK
MAX PONDING LEVEL
6" TYP
0% SLOPE
12" MIN
CONC. WALL
BIORETENTION SOIL
THICKENED GUTTER
24" MIN.
2"-3" CHOKER STONE (3/8"- 1/4") OR FILTER FABRIC
IMPERVIOUS LINER WHERE REQUIRED BY CITY ENGINEER
12" TYP.
1 1/2" -3/4" WASHED STONE DRAINAGE BED
CHOKER STONE OR FILTER FABRIC
UNCOMPACTED SUBGRADE
SECTION A-A1
(PLANTER WITHOUT ON-STREET PARKING)
4" PERFORATED UNDER DRAIN WHERE NEEDED
WIDTH VARIES
2% TYP
SIDEWALK
MAX PONDING LEVEL
6" TYP
0% SLOPE
STANDARD COA CURB & GUTTER
24" MIN.
PAVERS OR CONCRETE PEDESTRIAN ZONE
SECTION B-B1
(PLANTER WITHOUT ON-STREET PARKING)
SOIL AND DRAINAGE PROFILE AS ABOVE
City of Atlanta
STANDARD DETAILS
STORMWATER PLANTER SECTIONS
REV.
DATE: APRIL 2012
ORIG. DATE:
SCALE: N.T.S.
DETAIL NO. SW-T_P003

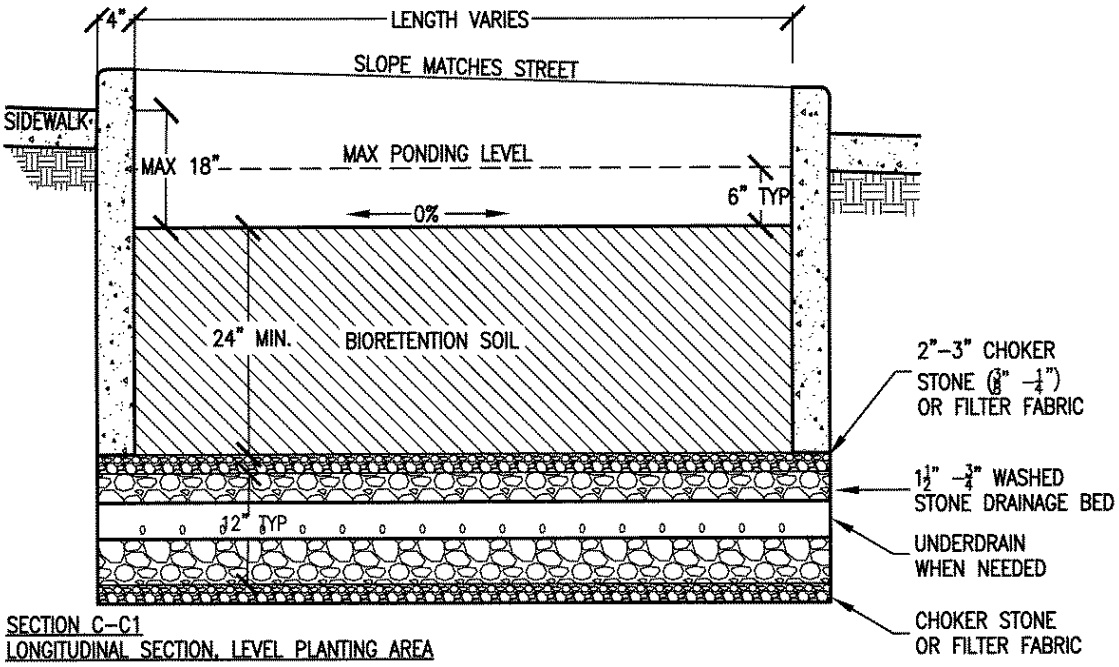

SECTION C–C1
LONGITUDINAL SECTION, LEVEL PLANTING AREA

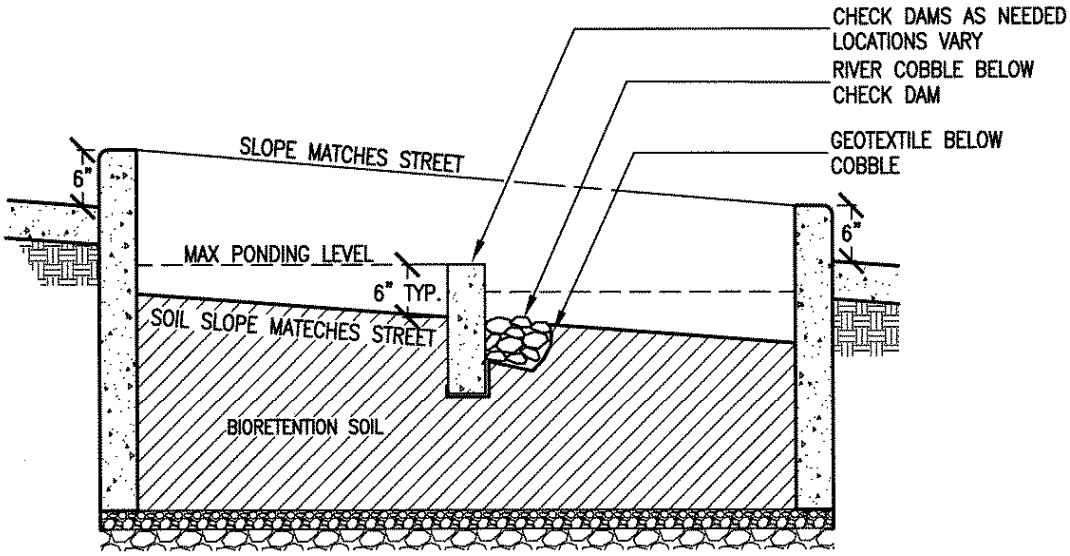

SOIL AND DRAINAGE PROFILE AS ABOVE

SECTION C–C1
LONGITUDINAL SECTION, SLOPED PLANTING AREA

NOTE: IF SLOPES OF STREET AND SIDEWALK ALLOW, PLANTERS SHOULD BE BUILT WITH LEVEL PLANTING AREAS

City of Atlanta	STANDARD DETAILS	REV. DATE: APRIL 2012 ORIG. DATE: SCALE: N.T.S.
	STORMWATER PLANTER LONGITUDINAL SECTIONS	DETAIL NO. SW–T_P004

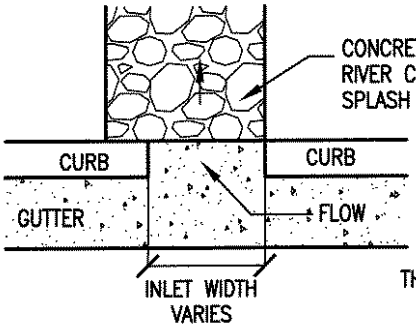

PLANTER INLET– PLAN

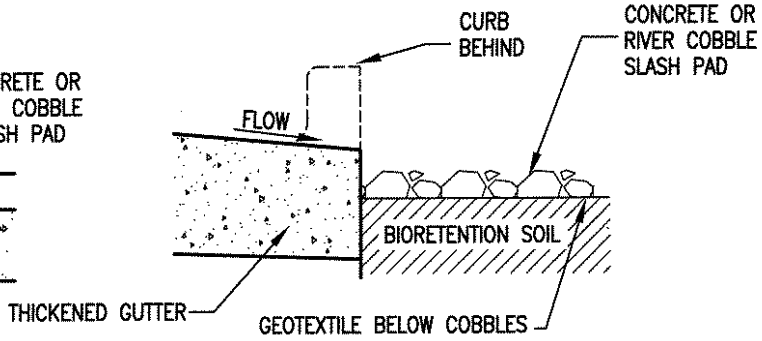

PLANTER INLET– SECTION

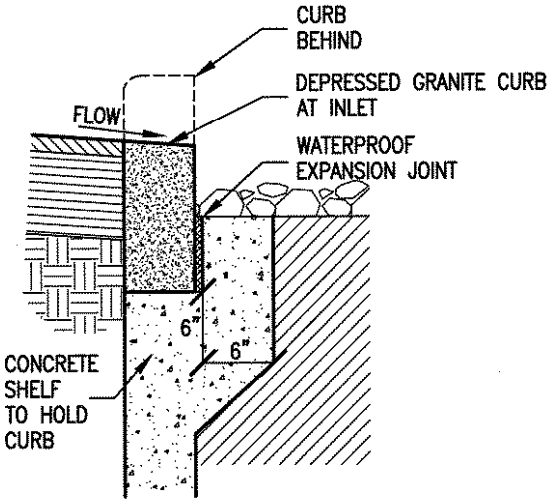

INLET AT GRANITE CURB

NOTES:

1) SIZE INLETS TO ACCOMMODATE DESIRED FLOWS.

2) INLETS & GUTTER MAY BE MODIFIED TO ADJUST FLOW INTO PLANTER.

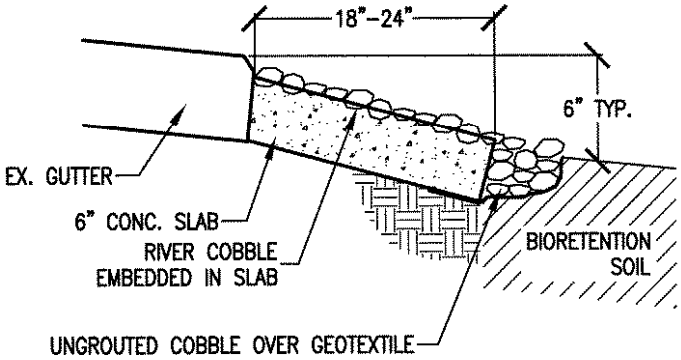

FOR 'BULB OUTS'/ CURB EXTENSIONS

THIS DETAIL WAS TAKEN FROM THE CITY OF ATLANTA'S WEBSITE. IT MAY HAVE BEEN MODIFIED AND SHOULD BE REVIEWED THOROUGHLY.

City of Atlanta	STANDARD DETAILS	REV. DATE: APRIL 2012 ORIG. DATE: SCALE: N.T.S.
	STORMWATER PLANTER INLET DETAILS	DETAIL NO. SW–T_P008

NOTES FOR STORMWATER PLANTERS:

1. WIDTH AND LENGTH OF PLANTER IS BASED ON SITE CONDITIONS AND STORMWATER TREATMENT VOLUME.
2. LOCATE ALL UTILITIES PRIOR TO DESIGN. SITE CONDITIONS WILL VARY AND SIGNIFICANT DESIGN ADAPTATIONS MAY BE NEEDED TO ADDRESS UTILITY CONFLICTS, STEEP SLOPES, AND OTHER CONSTRAINTS.
3. IF SLOPE OF ROAD AND SIDEWALK ALLOW, PLANTERS SHOULD BE BUILT WITH LEVEL PLANTING AREAS (0% SLOPE LONGITUDINALLY) FOR MAXIMUM STORMWATER TREATMENT VOLUME.
4. LONGITUDINAL SLOPES OF CURBS SURROUNDING PLANTER MATCH ROAD. LEVEL BOTTOM PLANTERS HAVE A MAXIMUM DEPTH OF 18" BELOW SURROUNDING CURB AT DEEPEST POINT.
5. CROSS SLOPES SHOULD ALWAYS BE AS CLOSE TO LEVEL (0% SLOPE) AS POSSIBLE.
6. CURBS, GUTTERS, STREETS, AND SIDEWALKS SHALL CONFORM TO CITY OF ATLANTA STANDARDS.
7. PROVIDE ELEVATIONS AT ALL INLETS AND OUTLETS, AS WELL AS ALL GRADES ON STREET AND BOTTOM OF PLANTER.
8. SIDEWALK ELEVATION MUST BE HIGHER THAN MAXIMUM FLOW OR POOL ELEVATION.
9. PLANTERS MUST BE ABLE TO WITHSTAND STORMWATER FLOWS WITHOUT EROSION OR OTHER DAMAGE. INLETS SHOULD BE SIZED AND CHECK DAMS USED TO ENSURE APPROPRIATE VELOCITIES.
10. ALL PLANTERS MUST BE FULLY VEGETATED. SUGGESTED SPECIES CAN BE FOUND IN THE GEORGIA STORMWATER MANAGEMENT MANUAL, VOL. 2, APPENDIX F.
11. ALL VEGETATED AREAS MUST BE MULCHED WITH EITHER 2–3" OF NON–FLOATABLE ORGANIC MULCH (SUCH AS SHREDDED HARDWOOD OR LEAF MULCH) OR STONE. STONE MULCH MAY BE NEEDED IN AREAS OF STRONG FLOWS TO PREVENT EROSION. ALL PONDING ELEVATIONS SHOWN IN DETAILS ARE ASSUMED TO BE MEASURED FROM TOP OF MULCH LAYER.
12. BIORETENTION SOIL MUST CONFORM TO PERFORMANCE STANDARDS DETAILED IN SPECIFICATIONS.
13. BIORETENTION SOIL MUST BE A MIN. OF 24" DEEP AT SHALLOWEST POINT. 36" DEPTH IS REQUIRED FOR PLANTING TREES.
14. UNDERDRAINS MAY BE REQUIRED UNLESS INFILTRATION TESTS IN SOILS AT BOTTOM OF PLANTER SHOW SATURATED INFILTRATION RATES OF GREATER THAN 1/2 INCH PER HOUR (1 FOOT/DAY).

THIS DETAIL WAS TAKEN FROM THE CITY OF ATLANTA'S WEBSITE. IT MAY HAVE BEEN MODIFIED AND SHOULD BE REVIEWED THOROUGHLY.

City of Atlanta	STANDARD DETAILS	REV. DATE: APRIL 2012 ORIG. DATE: SCALE: N.T.S.
	STORMWATER PLANTER NOTES	DETAIL NO. SW–T_P009

Sample Stormwater Planter Inspection and Maintenance Checklist

Inspector:	
Date:	***Time:***
Weather: ***Rainfall over previous 2-3 days?***	
Bioretention Location:	

Mark items in the table below using the following key:

- **X** Needs immediate attention
- – Not Applicable
- ✓ Okay
- **?** Clarification Required

Planter Components:

Items Inspected	Checked		Maintenance Needed		Inspection Frequency
DEBRIS CLEANOUT	**Y**	**N**	**Y**	**N**	
Planter area and contributing draining areas clean of debris.					Monthly
No dumping of yard wastes into planter.					Monthly
Litter (trash, debris, etc.) have been removed.					Monthly
VEGETATION					
No evidence of erosion at pretreatment areas.					Monthly
Is plant composition still according to approved plans?					Monthly
No placement of inappropriate plants in planter area.					Monthly
DEWATERING AND SEDIMENTATION					
Planter dewaters between storms.					After Major Storms
No evidence of standing water.					
No evidence of surface clogging.					
OUTLETS/OVERFLOW SPILLWAY					
Good condition, no need for repair.					Annually and After Major Storms
No evidence of erosion.					
No evidence of any blockages.					
INTEGRITY OF BIORETENTION					
Planter has not been blocked or filled inappropriately.					Annually
Mulch layer is still in place (depth of at least 3”).					Annually
Noxious plants or weeds removed.					Annually

COMMENTS:

OVERALL CONDITION OF FACILITY:

In accordance with approved design plans? Y / N *In accordance with As Built plans?* Y / N

Dimension on as built:

Field Verified Dimension:

Maintenance required as detailed above? Y / N Compliance with any other required conditions? Y / N

Comments: _____

_____

Dates by which maintenance must be completed: _____ /_____ /_____

Dates by which outstanding information is required: _____ /_____ /_____

Inspector's signature: _____

Engineer/Agent's signature: _____

Engineer/Agent's name printed: _____

SMALL COMMERCIAL GUIDE

CITY OF ATLANTA, GEORGIA
DEPARTMENT OF WATERSHED MANAGEMENT

SUBSURFACE INFILTRATION

Subsurface infiltration facilities are underground holding areas that receive, store, and infiltrate stormwater runoff from impervious areas. These systems include modified French drains (MFD), dry wells, subsurface stone galleries, and other open-bottom chamber products. They differ from infiltration trenches because runoff enters the facility through inlets, roof leaders, a pretreatment system, or other directly piped connections rather than through a surface conveyance. The runoff is temporarily stored as it passes through the surrounding stone bedding and infiltrates into the adjacent subsoil. An overflow mechanism (surcharge pipe, connection to larger infiltration area, etc.) is provided to ensure that excess runoff is safely and efficiently conveyed to downstream drainage systems or receiving waters. This section focuses on MFD and dry wells as the most appropriate solutions for small commercial sites.

A modified French drain can be added to a small commercial site to blend into the overall site plan.

MFDs are shallow trench excavations filled with stone that are designed to intercept and temporarily store stormwater runoff until it infiltrates into the soil. They are particularly well-suited to receive rooftop runoff, but can also be used to receive stormwater runoff from other small, impervious areas. They are essentially infiltration trenches but with the runoff introduced via a perforated pipe set into the upper portion of the gravel.

Dry wells consist of seepage tanks set in the ground and surrounded with stone that are designed to intercept and temporarily store stormwater runoff until it can infiltrate into the soil. Alternately, water can flow into a pit filled with stone via a perforated pipe with a perforated standpipe in place of the tank.

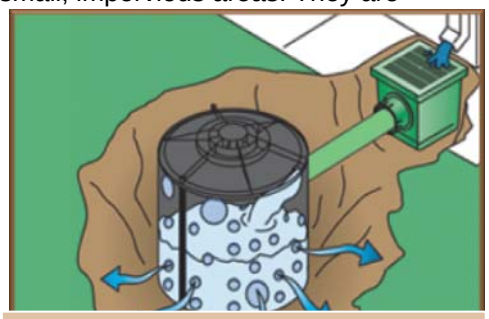

A dry well can be added to a small commercial site to help direct rooftop runoff to infiltrate in the ground.

Subsurface stone galleries and other open-bottom chamber products also store stormwater runoff and infiltrate soils but are not preferred for small commercial sites.

Location

- For small commercial sites, the type of subsurface infiltration chosen will depend on drainage patterns and available space.
- They should be designed so that the top of the MFD or dry well is as close to the surface as possible to reduce digging needed to facilitate maintenance access.
- Subsurface soils must not be compacted. Once the area is excavated, subsoils need to be loosened and tilled to a depth of 6 inches.

- MFD trenches and dry wells should be located at least 5 feet from building foundations and 10 feet from buildings with basements and property lines.
- The top end of the MFD can be next to the building in order to connect to downspouts, but should slope away from the building.
- To reduce the chance of clogging, MFDs and dry wells should drain only impervious areas, and runoff should be pretreated with at least one of the pretreatment details found in Appendix B, Supplemental Green Infrastructure Practice Details.
- MFDs and dry wells should not be located beneath an impervious (paved) surface, in an area with a water table or bedrock less than 2 feet below the trench bottom, over other utility lines, or above a septic field.
- Subsurface stone galleries and chambers can be installed under parking lots and other developed areas. It is important to provide adequate access to the system through manholes for maintenance and observation.
- The downstream end of the MFD pipe must daylight more than 10 feet from the property line. This can be done with a riser and upflow drain if necessary.

A modified French drain should be constructed in a manner to minimize earth disturbance.

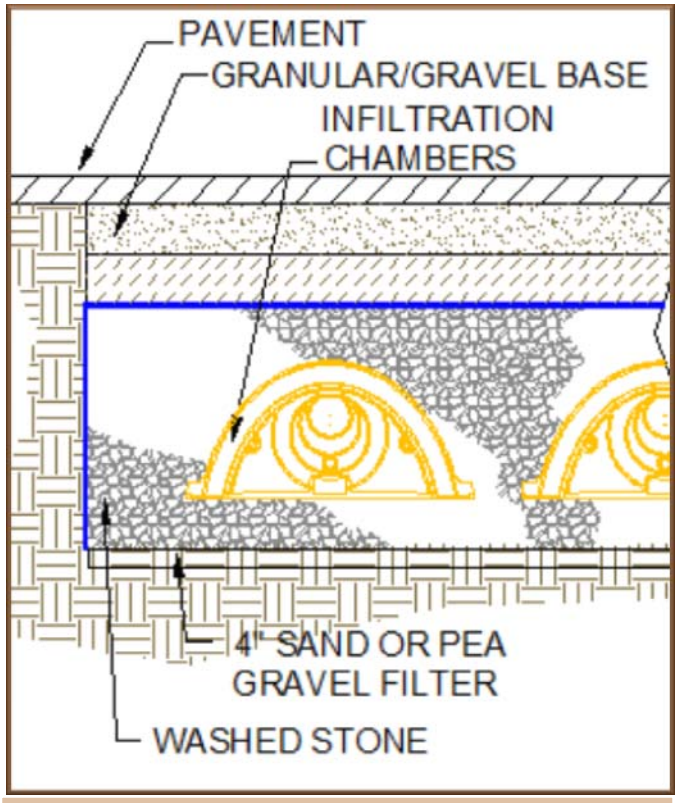

Open-bottom concrete arch structures placed over gravel sub-base increase storage capacity in small commercial areas. Providing sufficient infiltration surface area must be a focus. Non-woven geotextile fabric on top and sides only.

Design

General

- To prevent clogging, appropriate pretreatment including sediment trap sumps, catch basin inserts, basket and in-line leaf strainers, or other available pre-manufactured filtering units should be provided to minimize the quantity of sediment that reaches the system. Follow the manufacturer's specifications where available.
- A sediment sump or vault chamber sized to have 1 cubic foot of storage per 100 feet of impervious area draining to it should be placed at the inlet of the subsurface infiltration practice.
- The bottom of the system should be flat or gently sloping toward the downstream end to provide uniform infiltration across the subsoil interface.
- Riprap, plunge pools, pads, or other energy dissipaters should be placed at the end of the outlet for surface overflow discharges.
- Runoff in excess of the design volume should be diverted around the practice or alternatively, in the case of MFDs, to a downstream overflow to avoid damage to the practice.
- Subsurface infiltration may include stone storage galleries, perforated high-density polyethylene pipe, dry well structures, or other proprietary manufactured systems.
- Gravel should be angular, washed, and uniformly graded No. 57 stone (0.75-inch to 1.75-inch diameter).
- Subsurface stone galleries and MFDs must not be deeper than they are wide.
- Dry wells must be surrounded by a zone of angular, washed, and uniformly graded No. 57 stone.
- The slope of the MFD pipe should be between 0.5% and 6%. It can be serpentine or multi-pronged if sufficient slope is available.
- MFD gravel depths should be at least 18 inches and no more than 36 inches.
- Chambers associated with subsurface stone galleries should meet the following requirements:
    - Minimum 3,000-psi structural reinforced concrete may be used in non-traffic areas.
    - All joints should be constructed with water stops.
    - Cast-in-place walls must follow structural retaining wall design procedures.
    - Maximum depth from finished grade to the chamber's invert should not exceed 20 feet.
- If proprietary manufactured systems are used, provide manufacturer's specifications, details, and sizing information indicating that the system can meet the RRv Required for the site.
- Systems must meet structural requirements for minimum cover, overburden support, and traffic loading for anticipated surface use without compacting subsoils. Additional aggregate may be required for structural support.
- Adequate maintenance access points should be provided for all systems at the inlet pipe and outflow structures.
    - Vaults with widths of 10 feet or less should have removable lids.

Step-by-Step sizing

1. Establish the RRv Required (in cubic feet) for the contributing impervious area using Figure 5 in Section 5, Design Process.
2. Determine the dimensions and depth of the proposed subsurface infiltration practice.
    a. Length × width × depth for MFDs and stone galleries

b. Diameter, perimeter stone storage width, and depth for dry wells

3. Confirm the site infiltration rates per infiltration testing parameters in Appendix C.
4. For MFDs, use the dimensions determined in Step 2 above. Then refer to Table A for infiltration rates greater than 0.25 inch per hour or Table B for infiltration rates less than 0.25 inch per hour to find the storage volume provided in the MFD stone.
5. For stone storage galleries use the dimensions determined in Step 2 above. Then refer to Table C for infiltration rates greater than 0.25 inch per hour or to Table D for infiltration rates less than 0.25 inch per hour to find the storage volume provided in the stone.
6. For dry wells, use Table E for infiltration rates greater than 0.25 inch per hour or Table F for infiltration rates less than 0.25 inch per hour.
7. For chamber systems, provide manufacturer's sizing calculations indicating that RRv Required has been met.

MFD STORAGE TABLE A
Stone Storage Volumes for Infiltration Rates greater than 0.25 inches/hour (cubic feet)
100% RRv Credit by Volume

MFD Typical Dimensions (feet)	3x10	3x20	3x30	3x40	3x50	5x10	5x20	5x30	5x40	5x50	5x60	5x70	5x80	5x90	5x100
surface area (square feet)	30	60	90	120	150	50	100	150	200	250	300	350	400	450	500
Stone Storage at 18" Depth (cubic feet)	18	36	54	72	90	30	60	90	120	150	180	210	240	270	300
Stone Storage at 24" Depth (cubic feet)	24	48	72	96	120	40	80	120	160	200	240	280	320	360	400
Stone Storage at 36" Depth (cubic feet)	36	72	108	144	180	60	120	180	240	300	360	420	480	540	600

note: table assumes a void ratio of 0.40

MFD STORAGE TABLE B
Stone Storage Volumes for Infiltration Rates less than 0.25 inches/hour (cubic feet)
50% RRv Credit by Volume

MFD Typical Dimensions (feet)	3x10	3x20	3x30	3x40	3x50	5x10	5x20	5x30	5x40	5x50	5x60	5x70	5x80	5x90	5x100
surface area (square feet)	30	60	90	120	150	50	100	150	200	250	300	350	400	450	500
Stone Storage at 18" Depth (cubic feet)	9	18	27	36	45	15	30	45	60	75	90	105	120	135	150
Stone Storage at 24" Depth (cubic feet)	12	24	36	48	60	20	40	60	80	100	120	140	160	180	200
Stone Storage at 36" Depth (cubic feet)	18	36	54	72	90	30	60	90	120	150	180	210	240	270	300

note: table assumes a void ratio of 0.40

STONE GALLERY STORAGE TABLE C Stone Storage Volumes for Infiltration Rates greater than 0.25 inches/hour (cubic feet) 100% RRv Credit by Volume										
Stone Gallery Typical Dimensions (feet)	10x10	10x20	10x30	10x40	10x50	10x60	20x20	20x30	20x40	30x30
surface area (square feet)	100	200	300	400	500	600	400	600	800	900
Stone Storage at 24" Depth (cubic feet)	80	160	240	320	400	480	320	480	640	720
Stone Storage at 36" Depth (cubic feet)	120	240	360	480	600	720	480	720	960	1080
Soil Stone at 48" Depth (cubic feet)	160	320	480	640	800	960	640	960	1280	1440
Stone Storage at 60" Depth (cubic feet)	200	400	600	800	1000	1200	800	1200	1600	1800
note: table assumes a void ratio of 0.40										

STONE GALLEREY STORAGE TABLE D Stone Storage Volumes for Infiltration Rates less than 0.25 inches/hour (cubic feet) 50% RRv Credit by Volume										
Stone Gallery Typical Dimensions (feet)	10x10	10x20	10x30	10x40	10x50	10x60	20x20	20x30	20x40	30x30
surface area (square feet)	100	200	300	400	500	600	400	600	800	900
Stone Storage at 24" Depth (cubic feet)	40	80	120	160	200	240	160	240	320	360
Stone Storage at 36" Depth (cubic feet)	60	120	180	240	300	360	240	360	480	540
Soil Stone at 48" Depth (cubic feet)	80	160	240	320	400	480	320	480	640	720
Stone Storage at 60" Depth (cubic feet)	100	200	300	400	500	600	400	600	800	900
note: table assumes a void ratio of 0.40										

DRY WELL STORAGE TABLE E Storage Volumes for Infiltration Rates greater than 0.25 inches/hour (cubic feet) 100% RRv Credit by Volume							
Tank inside diameter (inches)	24	36	48	60	72	84	96
Storage at 18" Depth (cubic feet)	8	15	25	37	51	67	86
Storage at 24" Depth (cubic feet)	11	20	33	49	68	90	115
Storage at 36" Depth (cubic feet)	16	30	49	73	102	135	172
Storage at 48" Depth (cubic feet)	21	41	66	97	135	180	230
Storage at 60" Depth (cubic feet)	27	51	82	122	169	224	287
Diameter of Dry Well plus stone perimeter must exceed depth							
Storage Volume assumes 12 inch stone perimeter for full depth of Dry Well							

DRY WELL STORAGE TABLE F Storage Volumes for Infiltration Rates less than 0.25 inches/hour (cubic feet) 50% RRv Credit by Volume							
Tank inside diameter (inches)	24	36	48	60	72	84	96
Storage at 18" Depth (cubic feet)	4	8	12	18	25	34	43
Storage at 24" Depth (cubic feet)	5	10	16	24	34	45	57
Storage at 36" Depth (cubic feet)	8	15	25	37	51	67	86
Storage at 48" Depth (cubic feet)	11	20	33	49	68	90	115
Storage at 60" Depth (cubic feet)	13	25	41	61	85	112	144
Diameter of Dry Well plus stone perimeter must exceed depth							
Storage Volume assumes 12 inch stone perimeter for full depth of Dry Well							

Maintenance

Routine operation and maintenance is essential to ensure proper functioning of subsurface infiltration systems. A legally binding Inspection and Maintenance Agreement shall be completed. A sample Inspection and Maintenance Checklist is included in this document. The following items should be included in the overall maintenance plan:

- Routinely inspect and clean out gutters and catch basins to reduce sediment load to the infiltration system.
- Clean intermediate sump boxes, replace filters, and otherwise clean pretreatment areas in directly connected systems. At a minimum, cleaning should occur quarterly.
- Routinely examine the practice to ensure that inlet and outlet devices are free of debris and operational.
- After storm events, evaluate the drain-down time of the subsurface infiltration system to ensure the drain-down time of 48 hours or less.

Examples

A dry well being placed during construction. Special attention should be placed on ensuring the excavation bottom surface is properly scarified.

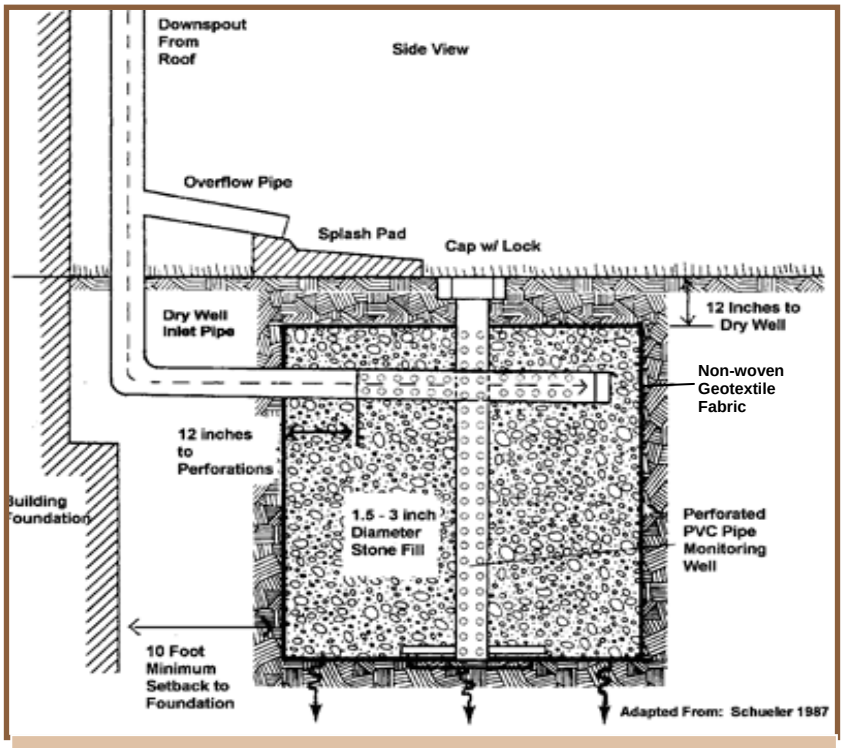

Typical Dry Well GI Practice

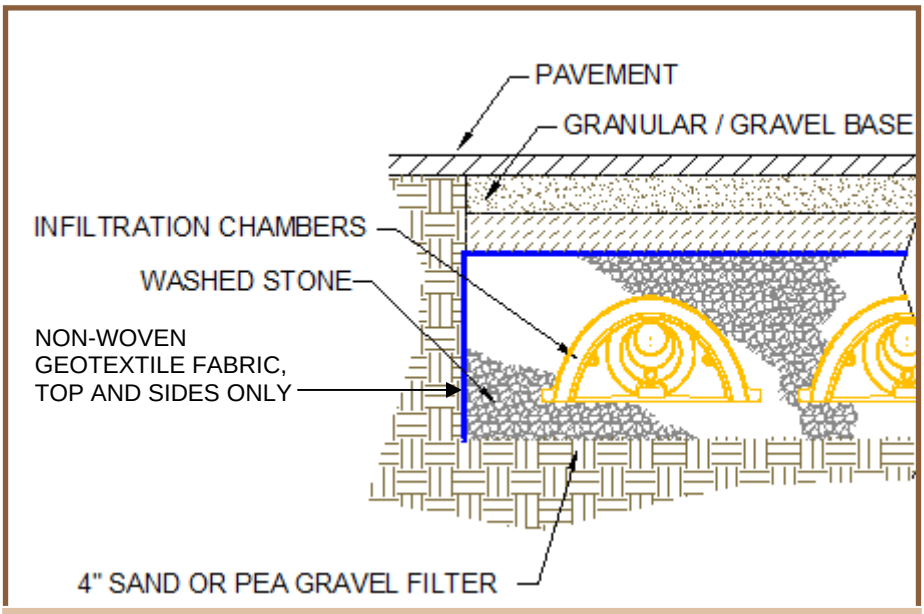

Typical Subsurface Infiltration Chamber GI Practice

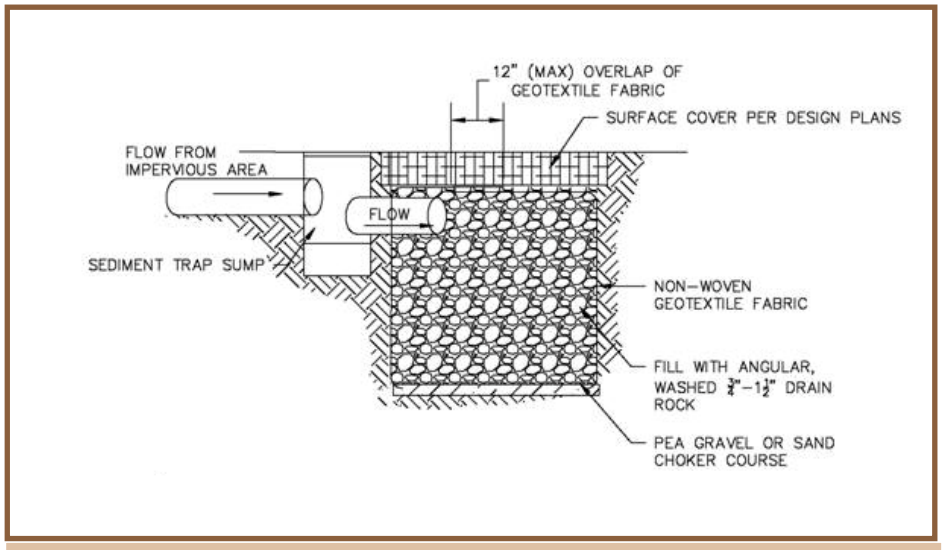

Typical Subsurface Stone Gallery GI Practice

Sample Subsurface Infiltration Inspection and Maintenance Checklist

Inspector:	
Date:	***Time:***
Weather: ***Rainfall over previous 2-3 days?***	
Subsurface Infiltration Practice Location:	

Mark items in the table below using the following key:

- **X** Needs immediate attention
- – Not Applicable
- ✓ Okay
- **?** Clarification Required

Subsurface Infiltration Practice Components:

Items Inspected	Checked		Maintenance Needed		Inspection Frequency
DEBRIS CLEANOUT	**Y**	**N**	**Y**	**N**	
Infiltration practice and contributing areas clean of debris.					Monthly
No dumping of yard wastes into infiltration practice					Monthly
Litter (trash, debris, etc.) have been removed.					Monthly
DEWATERING AND SEDIMENTATION					
Infiltration practice dewaters between storms.					After Major Storm
No evidence of standing water.					After Major Storm
No evidence of surface clogging.					After Major Storm
OUTLETS/OVERFLOW SPILLWAY					
Good condition, no need for repair.					Annual, and After a Major Storm
No evidence of erosion.					
No evidence of any blockages.					
INTEGRITY OF SYSTEM					
Infiltration practice has not been blocked or filled inappropriately.					Annual
No evidence of infiltration practice failure.					Annual

COMMENTS:

OVERALL CONDITION OF FACILITY:

In accordance with approved design plans? Y / N *In accordance with As Built plans?* Y / N

Dimension on as built:

Field Verified Dimension:

Maintenance required as detailed above? Y / N Compliance with other required conditions? Y / N

Comments: _____

_____

Dates by which maintenance must be completed: _____ /_____ /_____

Dates by which outstanding information is required: _____ /_____ /_____

Inspector's signature: _____

Engineer/Agent's signature: _____

Engineer/Agent's name printed: _____

SMALL COMMERCIAL GUIDE

CITY OF ATLANTA, GEORGIA
DEPARTMENT OF WATERSHED MANAGEMENT

RAINWATER HARVESTING / CISTERNS

Rain barrels, cisterns, and rainwater harvesting tanks are structures designed to intercept and collect runoff from rooftops and other impervious catchment areas. Rainwater harvesting devices temporarily store stormwater runoff for future nonpotable uses and can reduce water demands and cost for landscape irrigation. These practices may be installed above or below ground, and they may drain by gravity or be pumped. The difference between a barrel and a cistern relates to their respective size and application. Rain barrels are used in small-scale applications, while cisterns and tanks are used for larger volumes of runoff from more sizable drainage areas and structures. Stored water may be slowly released to a pervious area for infiltration, used for irrigation, or be recirculated for nonpotable building uses if applicable building codes allow. Rainwater harvesting is only effective at reducing stormwater runoff if the stored water is emptied between storms, freeing up storage volume for the next storm.

Cistern used in conjunction with a green roof. Southface, Atlanta, Georgia.

Location

- Pick a location keeping these factors in mind:
  - Ease in connecting roof drains
  - Overflow to downslope areas
  - Level area for placement of the cistern or tank
  - Location relative to intended water uses
  - Possible conflicts with site or building utilities
  - Electrical connections, if applicable
  - Emergency ingress/egress
  - Leaf screen option
  - Location of hoses or other water distribution components
  - Aesthetic considerations
- Ensure adequate space is provided for appropriate foundation and structural support for the cistern or tank structure.
- Choose an adequate discharge location and overflow route to a vegetated landscaped area or additional GI Practice.

Design

General

- Rainwater harvesting is most effective when designed to meet a specific water reuse demand. Multiple devices can be used to increase available storage and simplify routing for reuse. Devices should be of the appropriate type and have sufficient capacity for the intended application as noted:
  - Rain barrel (50–150 gallons)
  - Cistern (500–7,000 gallons)
  - Larger aboveground tank (3,000–12,000 gallons)
- Prepare a rainwater reuse schedule to confirm that the practice:
  - Is appropriately sized to meet the demand for reuse type.
  - Allowed by City code.
  - Sufficiently draws down stored water to maintain available storage between storm events.
  - Accommodates variation in demand as a result of season or high/low use periods.
- Select one or more pretreatment options. Pretreatment of water entering the cistern will remove debris, dust, leaves, and other material. Some pretreatment options are illustrated on the cistern typical detail.
- Fully cover water storage to avoid potential mosquito breeding.
- Storage tank material should be made of material that is appropriate for application and sealed with a water safe, non-toxic substance. Typically a commercial design intended for cistern use is chosen.
- For indoor reuse applications follow appropriate codes and:
  - Provide proper signage distinguishing nonpotable water from potable water
  - Use appropriate plumbing fittings, backflow prevention, and pumps
  - Incorporate appropriate filtration and treatment if reuse application connects to nonpotable indoor water system
- Install a bypass/overflow system to accommodate the conveyance of runoff when the system is full.
- Account for bypass and overflow runoff volumes in overall site design.

Screens are an acceptable form of pretreatment for rainwater harvesting systems. Photo courtesy of www.treehugger.com.

Step-by-Step Sizing

1. Determine the RRv Required (in cubic feet) for the contributing impervious area using Figure 5 in Section 5, Design Process, of this document. A rule of thumb is that you will need 0.6 gallon per square foot to meet the 1-inch rainfall requirement.
2. Convert RRv Required in cubic feet to gallons using the formula:

$$\textbf{RRv Required} \times 7.48$$

3. Increase the storage volume by 25% to provide contingency in case the tank does not completely empty between storm events.
4. If a device cannot hold the full RRv and contingency volume, one alternative is to divert overflow to another GI Practice such as a filter strip or rain garden.

Maintain

Routine operation and maintenance is essential to ensure proper functioning rainwater harvesting systems.

- Clean leaf screens, gutters, and downspouts.
- Ensure that overflow runoff is safely conveyed and there are no signs of erosion. Stabilize and remedy overflow erosion if necessary.
- Replace or repair overflow devices if obstructions or debris prevent proper drainage when storage capacity is exceeded.
- Disconnect, drain, and clean aboveground systems at the start of the winter season.
- A legally binding Inspection and Maintenance Agreement shall be completed. A sample Maintenance Inspection checklist is included in this document.

Example

A typical small commercial roof downspout is directly connected to the site stormwater collection system

A cistern intercepts downspout runoff, and outlets to the adjacent landscape area

Placement of storage tanks higher than areas where water will be reused may reduce or eliminate pumping needs. Photo courtesy of www.winebusiness.com.

Aboveground tanks can be adapted to fit various spaces and landscape aesthetics.

Photo courtesy of the City of Atlanta.

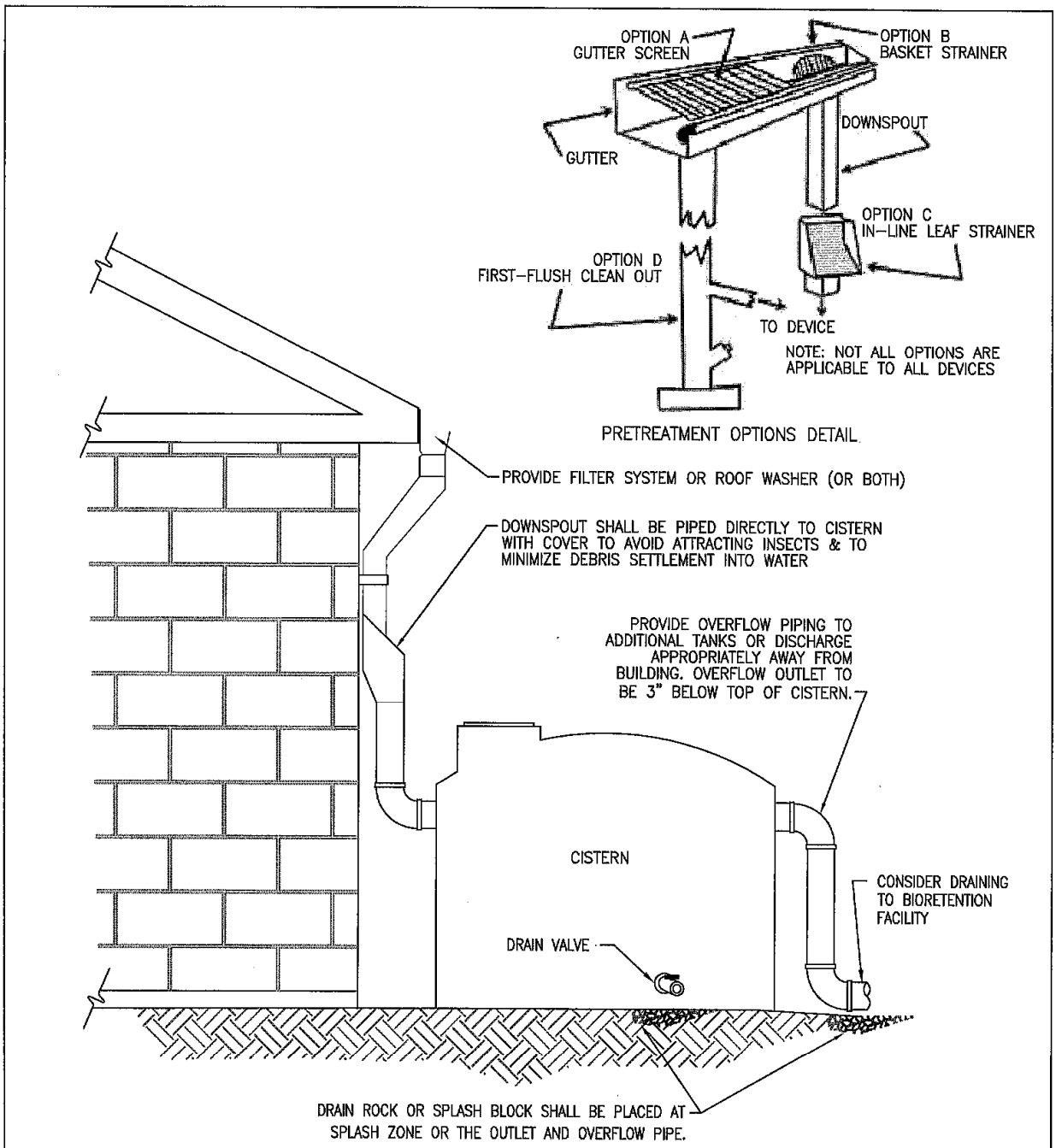

NOTES:

1. THE SIZE OF RAIN BARRELS AND CISTERNS VARY. ALL APPLICABLE LOCAL AND STATE STANDARDS SHALL BE MET.

N.T.S.

SMALL COMMERCIAL GUIDE TYPICAL DETAILS

RAINWATER HARVESTING
ABOVE GROUND

Rainwater Harvesting Maintenance Inspection Checklist

Inspector:	
Date:	***Time:***
Weather: ***Rainfall over previous 2-3 days?***	
Rainwater Harvesting Location:	

Mark items in the table below using the following key:

- **X** Needs immediate attention
- – Not Applicable
- ✓ Okay
- **?** Clarification Required

Rainwater Harvesting Components:

Items Inspected	Checked		Maintenance Needed		Inspection Frequency
DEBRIS CLEANOUT	**Y**	**N**	**Y**	**N**	
Storage tank clean of debris.					Monthly
Litter (trash, debris, etc.) have been removed.					Monthly
DEWATERING AND SEDIMENTATION					
Rainwater harvesting system dewaters between storms.					After Major Storm
No evidence of standing water.					
No evidence of outflow clogging.					
OUTLETS/OVERFLOW SPILLWAY					
Good condition, no need for repair.					Annually and After Major Storm
No evidence of erosion.					
No evidence of any blockages.					
INTEGRITY OF SYSTEM					
Rainwater harvesting system has not been blocked or filled inappropriately.					Annually
Structural components of tank are intact.					Annually
Piping and tank are free of leaks and malfunction.					Annually
Pumping and electrical systems are operational and in good condition.					Annually

COMMENTS:

OVERALL CONDITION OF FACILITY:

In accordance with approved design plans? Y / N *In accordance with As Built plans?* Y / N

Dimension on as built:

Field Verified Dimension:

Maintenance required as detailed above? Y / N Compliance with other conditions? Y / N

Comments: _____

_____

Dates by which maintenance must be completed: _____ /_____ /_____

Dates by which outstanding information is required: _____ /_____ /_____

Inspector's signature: _____

Engineer/Agent's signature: _____

Engineer/Agent's name printed: _____

SMALL COMMERCIAL GUIDE

CITY OF ATLANTA, GEORGIA
DEPARTMENT OF WATERSHED MANAGEMENT

GREEN ROOFS

A green roof is a system consisting of waterproofing material, growing medium, and vegetation, and is used in place of a traditional roof as a way to limit impervious site area and manage stormwater runoff. Green roofs capture and temporarily store runoff within the growing medium, promoting retention and evapotranspiration of precipitation. The majority of green roofs can be classified as intensive or extensive. Intensive green roof systems have a thick layer of engineered soil (12 to 24 inches) that supports a diverse plant community that may even include trees. Extensive green roof systems typically have a much thinner layer of engineered soil (2 to 6 inches) that supports a plant community composed primarily of drought-tolerant vegetation, such as sedums and succulent plants. In either case, the design should be self-sustaining.

City Hall Green Roof. Atlanta, Georgia

Location

- Green roofs are best suited for flat roofs. The maximum acceptable pitch for a conventional green roof is 25%.
- Example applications include: new or existing rooftops, rooftop pavilions, parking decks, and storage sheds.
- Systems can be designed to provide partial or full roof coverage and access to rooftop building utilities.
- The system should be placed in a location where it can be easily accessed for maintenance.
- The system should be placed in a location where the overflow can be connected to building drainage piping.
- Inspect the roofing membrane and components, and verify that the system conforms to the specifications of the green roof provider.

Design

General

- Green roofs must be designed in accordance with the ASTM International Green Roof Standards and applicable city, state, and federal building codes. The structural support must be sufficient to hold the additional weight of the green roof, which is typically an additional 15 to 30 pounds per square foot of load for an extensive system with a 4-inch growing medium. Because of these loading requirements, more options are available for new buildings; however, retrofits are possible. A licensed professional structural engineer should be involved with the design of a green roof to ensure that the roof has sufficient structural capacity.

- The green roof system should include:
  - A waterproofing layer
  - A root barrier to protect the waterproofing layer
  - Drainage layer between the root barrier and engineered soil
  - Outlet via a scupper or downspout to discharge runoff once the green roof is saturated
  - Filter fabric between the drainage layer and engineered soil
- Engineered soil mix consists of gravel, sand, crushed brick, natural soil, lightweight expanded clay aggregates, peat, and organic matter. Intensive systems will have a thicker engineered soil mix with more organic material to support shrubs and trees, while the extensive systems will consist of more inorganic material that will support less plant diversity. The waterproofing membrane should be tested after installation.
- An overflow system, such as a traditional rooftop drainage system with inlets set above the elevation of the green roof surface, should be designed to convey the stormwater runoff from larger storm events.

Flood Test

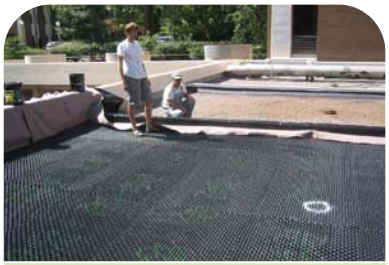

Drainage Layer

Filter Fabric

Engineered Soil Mix

Plant Material

Step-by-Step Sizing

1. Determine the RRv Required (in cubic feet) for the contributing impervious area using Figure 5 in Section 5, Design Process. The contributing impervious area should be limited to the area of the green roof. The green roof should not accept additional contributing drainage.
2. A typical green roof has been shown to reduce runoff by 0.4 inch of rainfall per 1 inch depth of soil media. For a roof with 3 inches of soil or more, RRv Required ***for the green roof area*** will be met. RRv Provided can be calculated by:

   RRv Provided (cubic feet) = (green roof area × green roof soil depth (inches) × 0.4)
   12

3. Table A shows the results of this calculation for a 100-square-foot section of green roof. The numbers can be extrapolated to determine the RRv Provided for any multiple of 100 square feet. For example, the RRv Provided calculation for a 400-square-foot roof with 6 inches of soil would be:

$$4 \times 20 \text{ cubic feet} = 80 \text{ cubic feet}$$

4. A minimum depth of 4 inches of soil is recommended to provide contingency in case the growing medium does not completely dry between storm events.
5. As an alternative, for green roofs with 3 inches or more of soil depth, the area of the green roof can be deducted from the impervious surface added or modified to determine RRv Required in Section 5, Design Process, of this document.
6. If the green roof does not meet the RRv Required for the impervious surface added or modified, one alternative is to divert overflow to another GI Practice, such as a cistern.

TABLE A
GREEN ROOF STORAGE PER 100 SF

Storage calculation is based on 0.4 inches of rainfall stored per inch of soil depth

Engineered Soil Depth (inches)	RRv Provided (cubic feet)
2	7
3	10
4	13
5	17
6	20
7	23
8	27
9	30
10	33
11	37
12	40

Vegetation

- Vegetation commonly planted on extensive green roofs includes sedums and succulents. To ensure diversity and viability, half of the plants should be sedum varieties and include at least four different species. The remaining plants should be herbs, meadow grasses, or meadow flowers, depending on the desired appearance. For intensive green roofs, qualified professionals should identify plants that will tolerate the harsh growing conditions found on rooftops and will be capable of thriving in a limited-moisture rooftop environment.

An extensive green roof should reach 90% growth coverage within two years.

Maintain

A legally binding Inspection and Maintenance Agreement shall be completed. A sample Inspection and Maintenance Checklist is included in this document. Routine operation and maintenance is essential to gain public acceptance of visible urban green roofs and ensure properly functioning systems.

- Green roofs are prone to volunteer weed growth. Weeding, pruning, and trash removal should be performed as needed to maintain the aesthetics.
- During drought conditions, it may be necessary to water the plants, as with any landscaped area.
- To ensure proper performance of the engineered soil mix, inspectors should check to make sure that the stormwater infiltrates properly into the soil within 48 hours after a storm.
- If excessive ponding is observed, corrective measures include inspection for soil compaction and drainage layer clogging.
- Inspect drain inlet pipes for leaks and clogs. Clear when soil substrate, vegetation, debris, or other materials clog the drain inlet.
- Inspect the roof for leaks and structural deficiencies, and repair as necessary.

Example

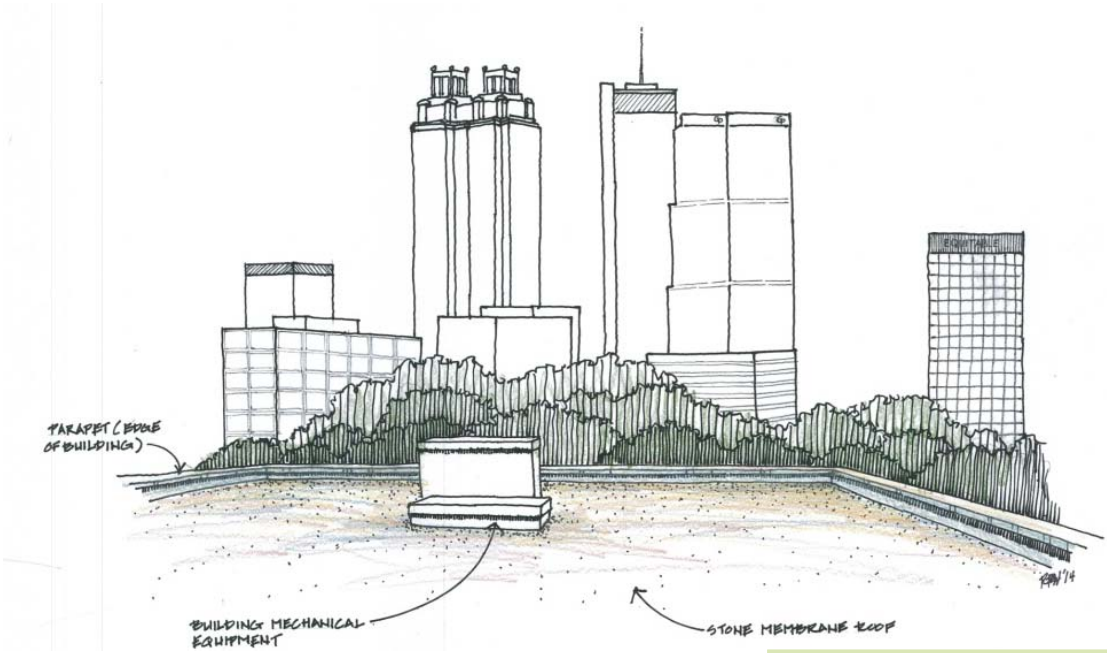

A typical urban flat membrane roof

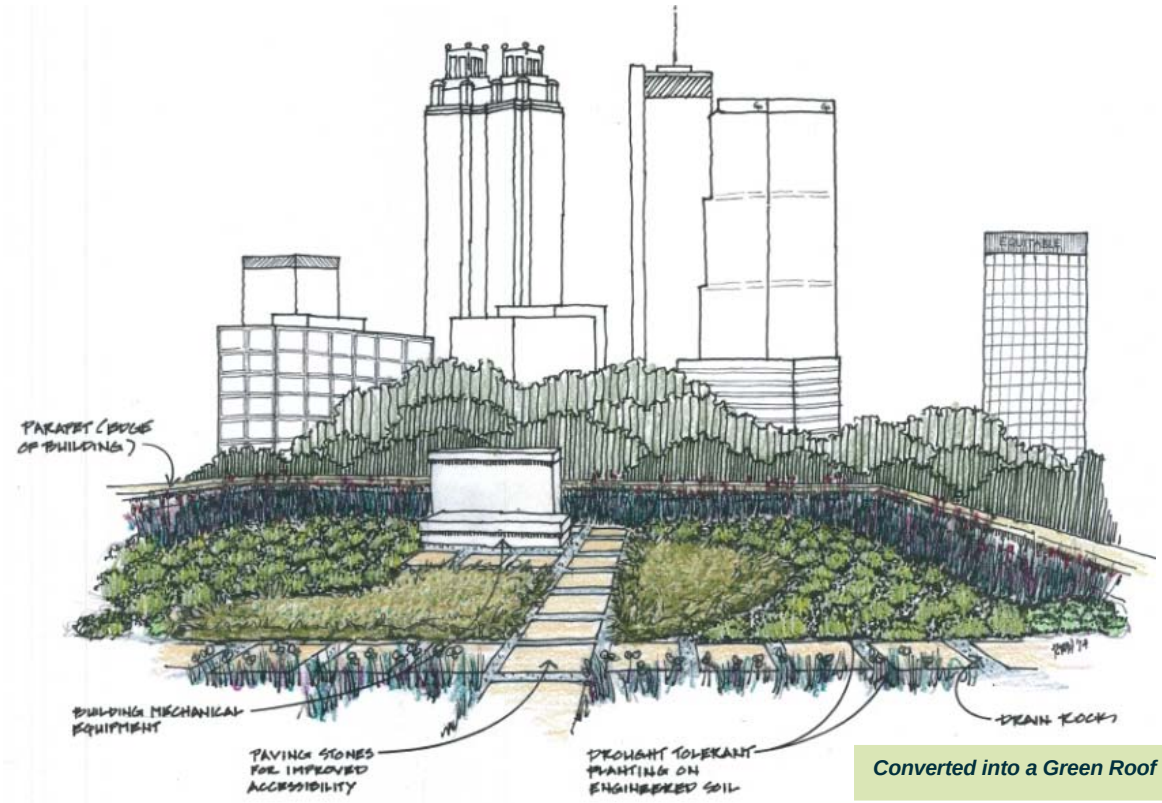

Converted into a Green Roof

Modular Green Roof System

Green Roof with Sedum Mix

Extensive Green Roof Example. A simple monoculture of sedum with maintenance access provided by rubber walkway stones.

Intensive Green Roof Example. Intensive green roofs are usually accessible to others (besides maintenance) and allow for great plant diversity.

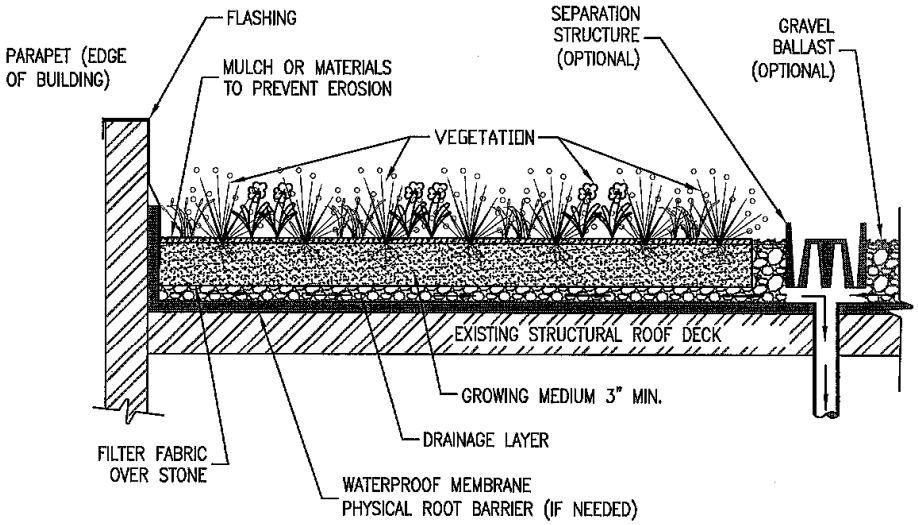

GREEN ROOF WITH DRAINAGE LAYER

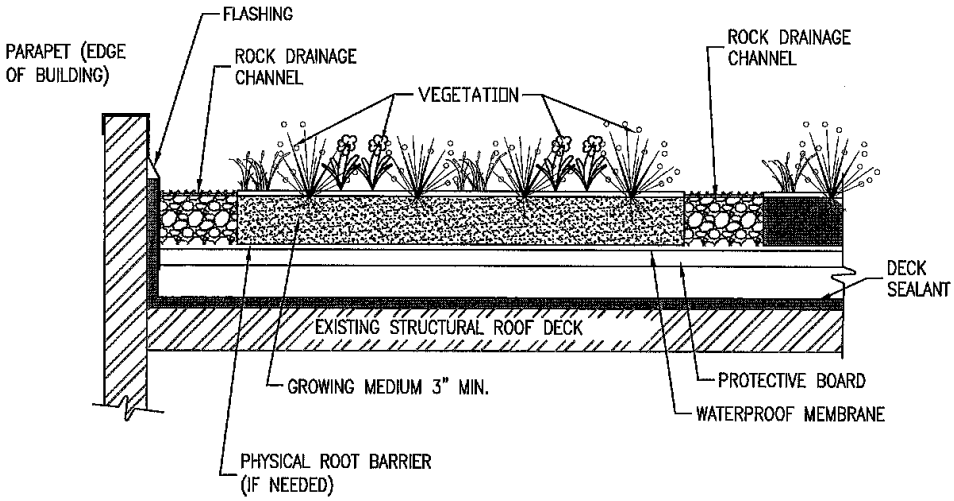

GREEN ROOF WITH DRAINAGE CHANNELS

N.T.S.

SMALL COMMERCIAL GUIDE TYPICAL DETAILS

GREEN ROOF

NOTES:

1. MANY GREEN ROOF SYSTEMS EXIST ON THE MARKET. INSTALLATION REQUIREMENTS AND FEATURES VARY BY SYSTEM. SEE VENDOR LIST FOR SYSTEMS THAT HAVE BEEN APPROVED FOR USE BY THE CITY OF ATLANTA. OTHER SYSTEMS USED SHALL INCLUDE DETAILED DATA FROM VENDOR FOR DESIGN VERIFICATION.

2. ALL APPLICABLE BUILDING OCCUPANCY CODES MUST BE MET.

3. GREEN ROOF GROWING MEDIUM SHALL MEET THE FOLLOWING STANDARDS: NON-CAPILLARY PORE SPACE AT FIELD CAPACITY 0.333 BAR: ≥15% VOLUME, MOISTURE CONTENT AT FIELD CAPACITY ≥12% VOLUME, AND MAXIMUM WATER RETENTION ≥30% VOLUME. GREEN ROOF DRAINAGE LAYER SHALL MEET THE FOLLOWING SPECIFICATIONS: ABRASION RESISTANCE (ASTM-C131-96) ≤ 25% LOSS, SOUNDNESS (ASTM-C88 OR T103 OR T103-91) ≤ 5% LOSS, POROSITY (ASTM-C29) ≤ 25% LOSS, AND GRAIN SIZE DISTRIBUTION (ASTM-C136). GREEN ROOF SYSTEM COMPONENTS SHALL MEET THE STANDARDS PROVIDED IN THE MOST CURRENT RELEASE OF THE GERMAN GREENROOF GUIDELINES.

4. PRE CONSTRUCTION MEETING/TRAINING FOR ALL TRADES INVOLVED IN THE INSTALLATION OF A GREEN ROOF IS CRITICAL TO THE SUCCESS OF A GREEN ROOF DUE TO THE NUMBER OF TRADES INVOLVED.

5. CONTRACTORS SHOULD BE TRAINED FOR GREEN ROOF INSTALLATION AND HAVE A THOROUGH UNDERSTANDING OF THE OVERALL SYSTEM THAT THEY ARE INSTALLING. CONTRACTORS MUST BE AWARE OF THE ROOF ACCESS POINTS, LOAD BEARING POINTS, MATERIAL STORAGE REQUIREMENTS, MODE OF TRANSPORTATION OF MATERIALS TO THE JOBSITE, AND SCHEDULING OF MATERIALS.

6. APPLY WATERPROOF MEMBRANE AND INSPECT FOR ANY IRREGULARITIES THAT WOULD INTERFERE WITH ITS ELEMENTAL FUNCTION WITHIN THE GREEN ROOF SYSTEM. THE WATERPROOF MEMBRANE SHOULD BE PROTECTED WHEN EXPOSED TO INCREASED MOISTURE LEVELS FROM CONSTRUCTION AND IN WORK TRAFFIC ZONES. MEMBRANE PROTECTION SHOULD BE A MANDATORY REQUIREMENT OF INSTALLATION FOR THE PERIOD OF TIME IT IS EXPOSED DURING STAGING AND INSTALLATION OF OVERBURDEN, I.E. ALL LAYERS ABOVE THE MEMBRANE. ALL MEMBRANE LAYERS SHOULD HAVE ENOUGH STRENGTH TO COPE WITH THE WEIGHT OF CONSTRUCTION EQUIPMENT. THE FOLLOWING ARE MEMBRANE PROTECTION TECHNIQUES:

   a. RESTRICT PEDESTRIAN TRAFFIC ON MEMBRANE
   b. PHYSICAL PROTECTION
   c. PHASED CONSTRUCTION

7. WHEN THE WATERPROOFING MEMBRANE IS INSTALLED IT MUST BE TESTED TO ENSURE THAT THERE ARE NO LEAKS, AFTER WHICH IT SHOULD BE CONTINUOUSLY PROTECTED. THE DESIGN PROFESSIONAL IS RESPONSIBLE FOR DECIDING THE BEST METHOD TO TEST THE INTEGRITY OF THE WATERPROOFING MEMBRANE. THE MOST COMMON METHOD USED IS FLOOD TESTING. A FLOOD TEST TYPICALLY INVOLVES THE FOLLOWING STEPS:

   a. TEMPORARY BLOCKAGE OF DRAIN SYSTEM
   b. AREA COVERED WITH 2" WATER FOR 24 TO 48 HOURS
   c. INSPECTION OF THE UNDERSIDE OF TEST AREA FOR WATER INFILTRATION
   d. CAREFUL REMOVAL OF WATER FROM THE SITE SO AS NOT TO STRESS THE DRAINAGE SYSTEM.

8. INSTALL DRAINAGE LAYER, TAKING CARE TO PROTECT THE WATERPROOF MEMBRANE FROM DAMAGE.

9. TEST THE DRAINAGE LAYER.

10. INSTALL THE FILTER FABRIC OR SEPARATION LAYER OVER ENTIRE DRAINAGE LAYER.

11. INSTALL GROWING MEDIUM COMPONENT AS SPECIFIED.

12. ESTABLISH VEGETATION IN THE SPRING FOR BEST RESULTS, SEDUMS CAN BE ESTABLISHED FROM FRESH CUTTING THAT ARE BROADCAST ONTO THE GROWING MEDIUM. IN MAY/JUNE OR SEPTEMBER/OCTOBER, SEDUM PLUGS CAN BE ESTABLISHED BY PLANTING THEM 1 FOOT ON CENTER. PERENNIALS CAN BE SEEDED, EXCEPT DURING SUMMER MONTHS.

13. A BIODEGRADABLE OR PHOTODEGRADABLE WIND BARRIER OR HYDROMULCH MAY BE USED TO PREVENT EROSION DURING THE ESTABLISHMENT PERIOD. IT GENERALLY TAKES ABOUT TWO GROWING SEASONS FOR FULL ESTABLISHMENT

N.T.S.

SMALL COMMERCIAL GUIDE TYPICAL DETAILS

GREEN ROOF

Sample Green Roof Inspection and Maintenance Checklist

Inspector:	
Date:	***Time:***
Weather: ***Rainfall over previous 2-3 days?***	
Green Roof Location:	

Mark items in the table below using the following key:

- **X** Needs immediate attention
- – Not Applicable
- ✓ Okay
- **?** Clarification Required

Green Roof Components:

Items Inspected	Checked		Maintenance Needed		Inspection Frequency
DEBRIS CLEANOUT	**Y**	**N**	**Y**	**N**	
Green roof and contributing areas clean of debris.					Monthly
Litter (trash, debris, etc.) have been removed.					Monthly
VEGETATION					
No evidence of erosion.					Monthly
Is plant composition still according to approved plans?					Monthly
No placement of inappropriate plants.					Monthly
DEWATERING AND SEDIMENTATION					
Green roof dewaters between storms.					After Major Storm
No evidence of standing water.					
No evidence of surface clogging.					
Sediments should not be greater than 20% of design depth.					
OUTLETS/OVERFLOW SPILLWAY					
Good condition, no need for repair.					Annually and After Major Storm
No evidence of erosion.					
No evidence of any blockages.					
INTEGRITY OF BIORETENTION					
Green roof has not been blocked or filled inappropriately.					Annually
Noxious plants or weeds removed.					Annually

COMMENTS:

OVERALL CONDITION OF FACILITY:

In accordance with approved design plans? Y / N *In accordance with As Built plans?* Y / N

Dimension on as built:

Field Verified Dimension:

Maintenance required as detailed above? Y / N Compliance with other conditions? Y / N

Comments: _____
_____

Dates by which maintenance must be completed: _____ /_____ /_____

Dates by which outstanding information is required: _____ /_____ /_____

Inspector's signature: _____

Engineer/Agent's signature: _____

Engineer/Agent's name printed: _____

APPENDIX A – GI Practice Sizing Example

This GI Practice sizing example demonstrates each of the design steps for a typical small commercial redevelopment project, as outlined in Section 5 of the *Green Infrastructure Stormwater Management Practices for Small Commercial Development Guidelines*.

The example site is an existing commercial site (outlined in red in Figure A-1) that is entirely covered with impervious surfaces, including a building and parking area. The soil conditions are Type C with a water table that is 4 feet or greater below the surface. Proposed site impacts include a building addition, a partial pavement replacement, and circulation improvements along with reconfiguration of parking.

Figure A-1. Example Site

Example Site Information

Size = ½ acre
Existing Impervious Surface= 100%
Tested Soil Conditions = Infiltration rate 0.15 inch/hour (Type C)
Proposed building addition = 1,000 square feet
Pre-development pavement area impacted = 7,500 square feet
Proposed net impacted impervious change (see Table A-1 and Figure A-2) = 4,700 square feet

Table A-1. Example Site Impervious Surface

	Site element	Area (square feet)
A	Building addition	1000
B1	Demolished pavement for island	- (500)
B2	Demolished pavement for island	- (900)
B3	Demolished pavement for green buffer	-(1800)
B4	Demolished pavement for green buffer	- (600)
C	Replaced Pavement	3,700
	Impacted Impervious Surface	**4,700**

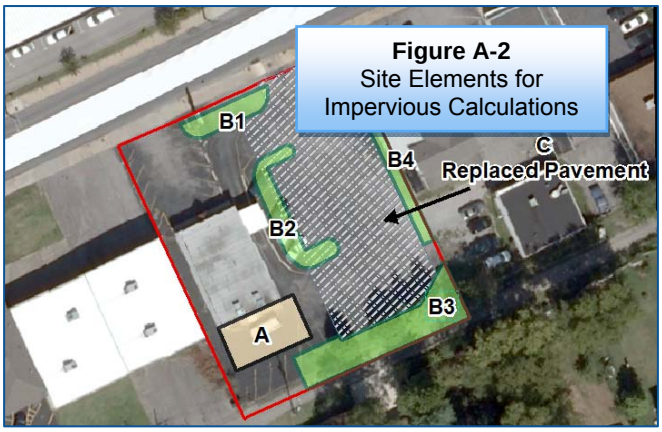

Figure A-2
Site Elements for Impervious Calculations

(Note: This manual applies because the net impacted impervious area is less than 5,000 square feet.)

STORMWATER DESIGN STEP 1: Determine RRv Required for a 1-Inch Rainfall Event

a. **Calculate net of created, added, and/or demolished and replaced impervious surface area from design plans.**

   The impacted impervious surface for the example site is shown on Figure A-2 and calculated in Table A-1.

b. **If the applicable impervious surface is less than 500 square feet or exceeds 5,000 square feet, this manual does not apply. Instead, a full design submittal must be prepared following the *Blue Book* and the *CSS*.**

   From Table A-1, the net impacted impervious surface falls within the range of this manual.

c. **Identify *RRv Required* from Figure A-3 (Section 5, Figure 5) using the calculated impervious surface area.**

Figure A-3. RRv Required for 1 Inch of Rainfall for Sizing Example

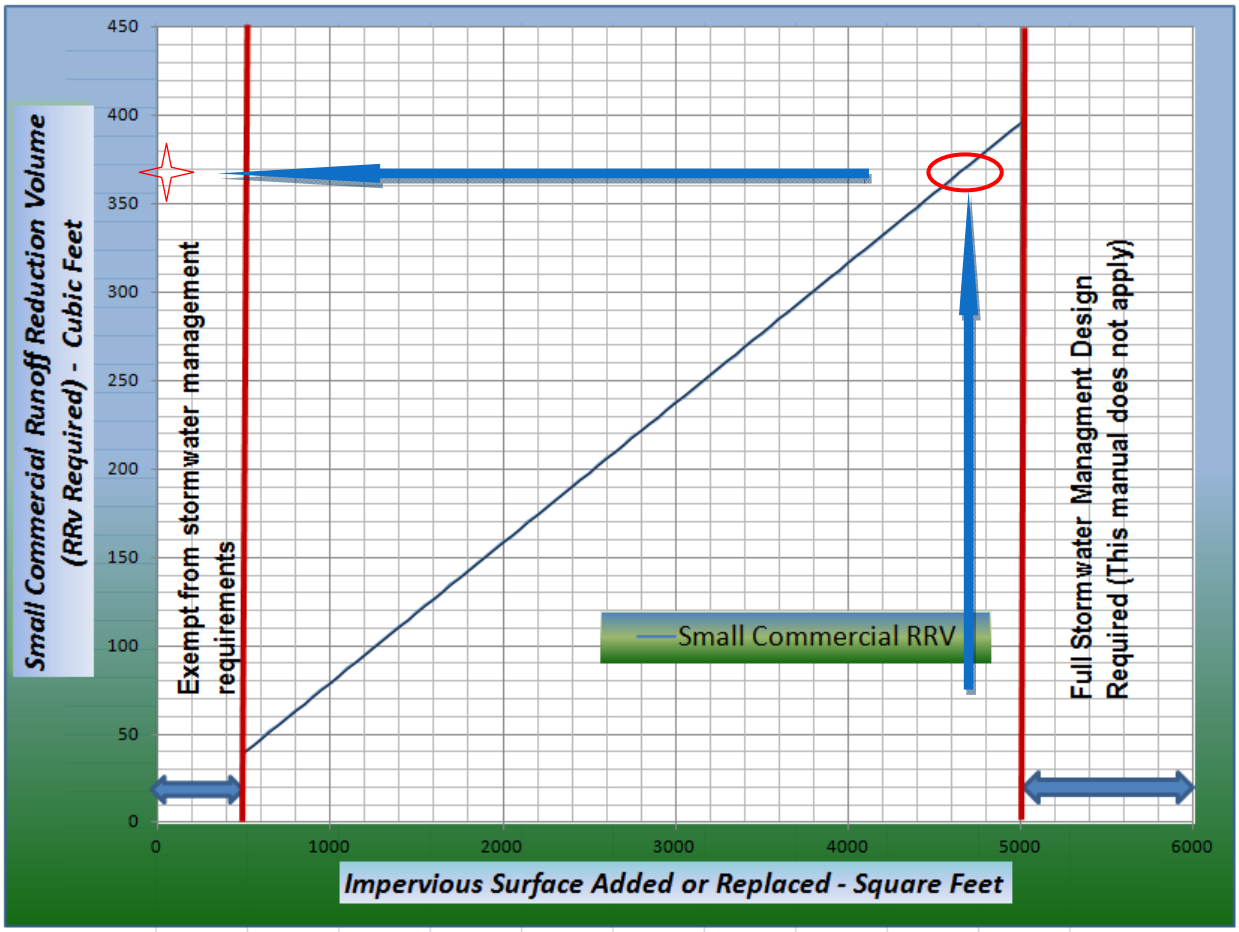

RRv Required from Figure A-3 = 370 cubic feet

STORMWATER DESIGN STEP 2: Identify and Select Combination of GI Practices That:

a. **Meet the intent and locations of practices proposed at stormwater concept plan meeting.**

b. In combination, can meet *RRV Required* storage requirements based on Figure A-3, GI Practice sizing tables, and any allowable volume reduction credits.

The practices identified in Figure A-4 were selected from the GI Practice Design Guidelines in Section 7 of this manual and were reviewed by City staff at the required Stormwater Concept Plan meeting. For this site, other combinations of alternatives would also work. These were selected to demonstrate a variety of practices.

The practices shown are:

GI Practice 1 = 10-foot by 20-foot (equivalent) bioretention area within the proposed parking lot island. GI Practice 1 will have 6 inches of surface ponding storage and 18 inches depth of amended soil.

GI Practice 2 = 20-foot by 40-foot permeable paver area with 12 inches of stone depth providing storage, infiltration, and pre-filtration for the downstream infiltration trench.

GI Practice 3 = 5-foot by 40-foot infiltration trench with no anticipated surface ponding and 18 inches of stone storage.

The sizes proposed for these practices are preliminary based on what works efficiently within the site layout. Final sizing to confirm that, in combination, they meet the RRv Required (370 cubic feet) will be the result of an iterative process in Step 4.

c. The surface type of the contributing drainage area is appropriate for the selected practice per Table 2 in Section 4.

For this example, GI Practice 1, Bioretention, receives runoff from pavement and the stabilized landscape island area. GI Practice 2, Permeable Paver Parking, receives runoff from pavement area. GI Practice 3, Infiltration Trench, receives runoff from the building addition roof and the adjacent grass area. Table A-2, derived from Section 4, Table 2, confirms that the selections are appropriate.

Table A-2. Appropriate GI Practice Selection by Contributing Drainage Area

GI Practice	Surface Type of Contributing Area					Design incorporates Pre -Treatment	Practice requires Pre-Treatment	Recommended Size of GI Practice Based on Contributing Area (%)
	Pavement	Roof	Grass / stabilized landscape	Dumpster pad	Loose gravel or exposed soil (high sediment potential)			
Bioretention	✓	✓	✓	✓		✓		5 to 10
Infiltration Trench	✓	✓	✓	✓			✓	5
Permeable Pavement	✓	✓				✓		25

STORMWATER DESIGN STEP 3: Size the Selected GI Practices to meet *RRv Required*:

a. Finalize the design layout and the GI Practice geometries (from Section 7 of this manual) that can be used to meet the *RRv required* from concept plan.

See Figure A-4 for preliminary GI practice dimensions for use in this step.

Figure A-4. Proposed GI Practices

b. Using proposed design plans, calculate the impervious area and delineate the flow path of runoff from created, added, and/or demolished and replaced impervious surface area to each planned GI Practice.

Figure A-5 shows the surface drainage area routed to each GI Practice. The areas are listed in Table A-3.

Figure A-5. Contributing Drainage Areas

c. Confirm that contributing drainage areas to each of the GI Practices do not exceed those noted in Section 4, Concept Development, Table 2.

For this example, the contributing drainage areas have been confirmed to be within acceptable design parameters as shown in Table A-3.

Table A-3. Contributing Drainage Areas

GI Practice		Contributing Drainage Area (square feet)	GI Practice Surface Area (square feet)	Surface Area % of Contributing Area	Allowable sizing per Table 2	Meets Criteria?
1	Bioretention island 6″ surface ponding	4,000	200 sf	5%	5% to 10%	Yes
1	Bioretention island soil storage	See line above	See line above	See line above	See line above	See line above
2	Permeable paver parking with 12″ stone storage depth	3,700	800 sf	21.6%	Up to 25%	Yes
3	5' x 40' Infiltration Trench	4,700	200 sf	4.4%	Up to 10%	Yes

STORMWATER DESIGN STEP 4: Calculate RRv Provided

a. Use sizing tables within the individual Section 7 GI Practice Design Guidelines to calculate volume provided:

GI Practice 1 Bioretention Surface Ponding (found in the Bioretention Design Guideline)

BIORETENTION TABLE A
Bioretention Surface Storage Volumes (cubic feet)

Bioretention Typical Dimensions (feet)	5x10	5x15	5x20	5x30	10x10	10x15	10x20	10x30	10x40	10x50	10x60	10x70	10x80	20x20	20x30	20x40	30x30
surface area (square feet)	50	75	100	150	100	150	200	300	400	500	600	700	800	400	600	800	900
Surface Storage at 6" Depth (cubic feet)	25	38	50	75	50	75	100	150	200	250	300	350	400	200	300	400	450
Surface Storage at 9" Depth (cubic feet)	38	56	75	113	75	113	150	225	300	375	450	525	600	300	450	600	675
Surface Storage at 12" Depth (cubic feet)	50	75	100	150	100	150	200	300	400	500	600	700	800	400	600	800	900

GI Practice 1

GI Practice 1 Bioretention Soil Storage (found in the Bioretention Design Guideline)

BIORETENTION TABLE B
Bioretention Soil Storage Volumes for all Infiltration Rates (cubic feet)
100% RRv Credit by Volume

Bioretention Typical Dimensions (feet)	5x10	5x15	5x20	5x30	10x10	10x15	10x20	10x30	10x40	10x50	10x60	10x70	10x80	20x20	20x30	20x40	30x30
surface area (square feet)	50	75	100	150	100	150	200	300	400	500	600	700	800	400	600	800	900
Soil Storage at 18" Depth (cubic feet)	24	36	48	72	48	72	96	144	192	240	288	336	384	192	288	384	432
Soil Storage at 24" Depth (cubic feet)	[illegible]	[illegible]	64	96	64	96	128	192	256	320	384	448	512	256	384	512	576
Soil Storage at 36" Depth (cubic feet)	48	72	96	144	96	144	192	288	384	480	576	672	768	384	576	768	864

note: table assumes a void ratio of 0.32

GI Practice 1

GI Practice 2 Permeable Paver Parking (found in the Permeable Pavement Practices Design Guideline)

PERMEABLE PAVEMENT STONE STORAGE TABLE B
Stone Storage Volumes for Infiltration Rates less than 0.25 inches/hour (cubic feet)
50% RRv Credit by Volume

Stone Storage Typical Dimensions (feet)	5x10	5x15	5x20	5x30	10x10	10x15	10x20	10x30	10x40	10x50	10x60	10x70	10x80	20x20	20x30	20x40	30x30
surface area (square feet)	50	75	100	150	100	150	200	300	400	500	600	700	800	400	600	800	900
Stone Storage at 12" Depth (cubic feet)	10	15	20	30	20	30	40	60	80	100	120	140	160	80	120	160	180
Stone Storage at 18" Depth (cubic feet)	15	23	30	45	30	45			120	150	180	210	240	120	180	240	270
Stone Storage at 24" Depth (cubic feet)	20	30	40	60	40	60	80	120	160	200	240	280	320	160	240	320	360
Stone Storage at 36" Depth (cubic feet)	30	45	60	90	60	90	120	180	240	300	360	420	480	240	360	480	540
Stone Storage at 48" Depth (cubic feet)	40	60	80	120	80	120	160	240	320	400	480	560	640	320	480	640	720
note: table assumes a void ratio of 0.40																	

GI Practice 2

GI Practice 3 Infiltration Trench (found in the Infiltration Trench Practices Design Guideline)

INFILTRATION TRENCH TABLE B
Stone Storage Volumes for Infiltration Rates less than 0.25 inches/hour (cubic feet)
50% RRv Credit by Volume

Infiltration Trench Typical Dimensions (feet)	3x10	3x20	3x30	3x40	3x50	5x10	5x20	5x30	5x40	5x50	5x60	5x70	5x80	5x90	5x100
surface area (square feet)	30	60	90	120	150	50	100	150	200	250	300	350	400	450	500
Cubic Feet of Stone Storage at 18" Depth	9	18	27	36	45	15	30	45	60	75	90	105	120	135	150
Cubic Feet of Stone Storage at 24" Depth	12	24	36	48	60	20	40	60	80	100	120	140	160	180	200
Cubic Feet of Stone Storage at 36" Depth	18	36	54	72	90	30	60	90	120	150	180	210	240	270	300
Cubic Feet of Stone Storage at 48" Depth	24	48	72	96	120	40	80	120	160	200	240	280	320	360	400
Cubic Feet of Stone Storage at 60" Depth	30	60	90	120	150	50	100	150	200	250	300	350	400	450	500
note: table assumes a void ratio of 0.40															

GI Practice 3

b. If *RRv Provided* above is greater or equal to *RRv required* from Step 1, proceed with site design and Plan Submittal Process

RRv Provided is the total of all of the individual GI Practice storage volumes from the sizing tables. The total for this example is 416 cubic feet as shown in Table A-4. RRv Provided is greater than or equal to RRv Required (416 cubic feet ≥ 370 cubic feet). This confirms that the storage provided by this example is acceptable.

Table A-4: *RRv Provided*

	GI Practice	Storage Volume (cubic feet)
1	Bioretention island 6″ surface ponding	100
1	Bioretention island soil storage	96
2	Permeable paver parking with 12″ stone storage depth	160
3	5′ x 40′ Infiltration Trench with 18” stone depth	60
	TOTAL *RRv Provided*	**416**

Because RRv Provided exceeds RRv Required, the designer has the option to repeat the sizing process with reduced GI practice dimensions or to proceed with site design and the plan submittal process. For this example, the length of the infiltration trench is reduced to 20 feet, resulting in 20 cubic feet of storage and a revised RRv Provided of 376 cubic feet. See Table A-5. The designer must confirm that contributing area requirements remain valid. For this example, the surface area was not altered, and the areas listed in Table A-3 remain valid.

INFILTRATION TRENCH TABLE B
Stone Storage Volumes for Infiltration Rates less than 0.25 inches/hour (cubic feet)
50% RRv Credit by Volume

Infiltration Trench Typical Dimensions (feet)	3x10	3x20	3x30	3x40	3x50	5x10	5x20	5x30	5x40	5x50	5x60	5x70	5x80	5x90	5x100
surface area (square feet)	30	60	90	120	150	50	100	150	200	250	300	350	400	450	500
Cubic Feet of Stone Storage at 18" Depth	9	18	27	36	45	15	30	45	60	75	90	105	120	135	150
Cubic Feet of Stone Storage at 24" Depth	12	24	36	48	60	20	40	60	80	100	120	140	160	180	200
Cubic Feet of Stone Storage at 36" Depth	18	36	54	72	90	30	60	90	120	150	180	210	240	270	300
Cubic Feet of Stone Storage at 48" Depth	24	48	72	96	120	40	80	120	160	200	240	280	320	360	400
Cubic Feet of Stone Storage at 60" Depth	30	60	90	120	150	50	100	150	200	250	300	350	400	450	500
note: table assumes a void ratio of 0.40															

GI Practice 3-revised

Table A-5. Revised *RRv Provided*

GI Practice		Storage Volume (cubic feet)
1	Bioretention island 6″ surface ponding	100
1	Bioretention island soil storage	96
2	Permeable paver parking with 12″ stone storage depth	160
3	5′ x 20′ Infiltration Trench with 18” stone depth	**30**
	REVISED *RRv Provided*	**386**

c. If, during this step, the site constraints do not allow enough volume capture and storage space to meet *RRv Required*, then determine the remaining runoff reduction volume:

RRv Required – RRv Provided = RRv Remaining

This step not necessary because the RRv Provided is greater than RRv Required.

d. Sites not able to provide adequate volume to meet *RRv required* need to meet additional Water Quality measures under Design Step 5.

This site exceeds the RRv Required and no additional measures will be employed. Proceed to Stormwater Design Step 6: Develop a Landscape Plan (not included in this sizing example).

APPENDIX B – Supplemental Green Infrastructure Practice Details

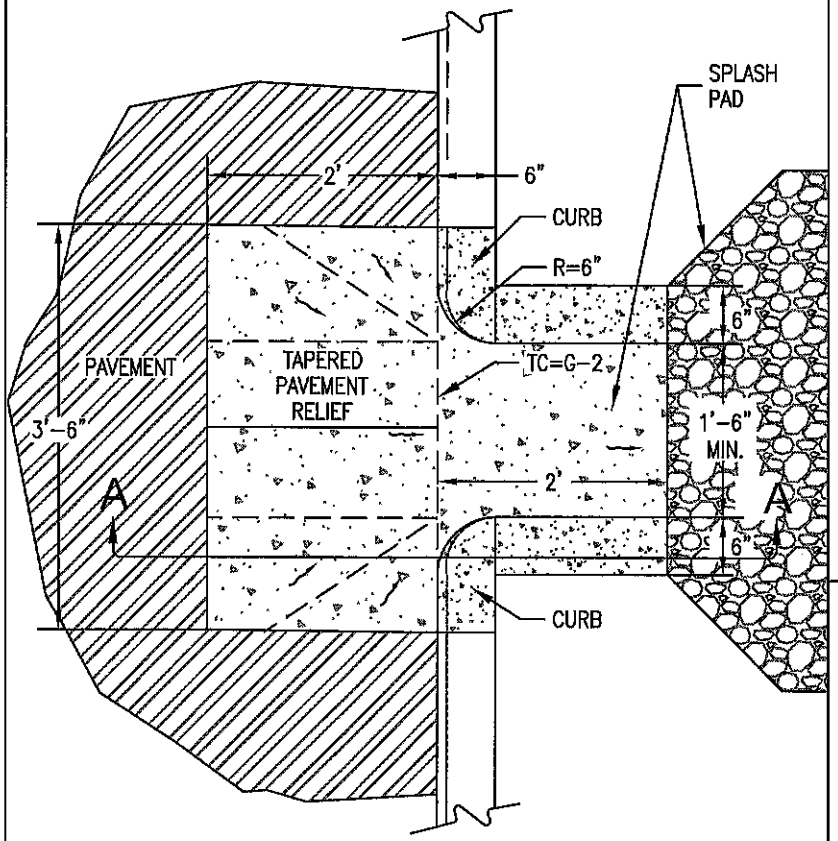

PLAN

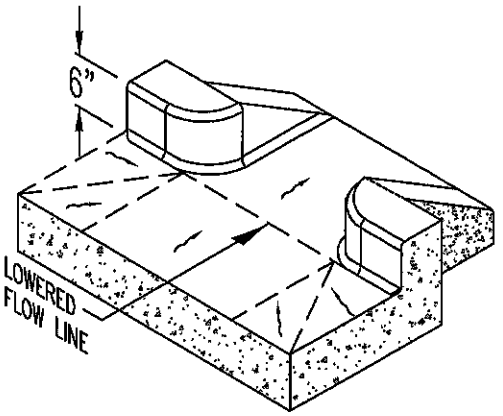

ISOMETRIC

NOTES:

1. CONCRETE SPLASH PAD NECESSARY WHERE WATER ENTERS AND/OR EXITS FACILITY.
2. FOR STORMWATER FACILITIES, INSTALL CONCRETE OR RIVER COBBLE TO TRANSITION FROM SPLASH PAD TO TOPSOIL.
3. SEE TYPICAL DETAIL FOR CURB TURNOUT OUTLET PROTECTION.
4. ENGINEER TO PROVIDE SPACING CALCULATIONS FOR CURB TURNOUTS TO ENSURE PONDING DEPTH IN STREET IS WITHIN ACCEPTABLE LIMITS PER CITY OF ATLANTA REQUIREMENTS.

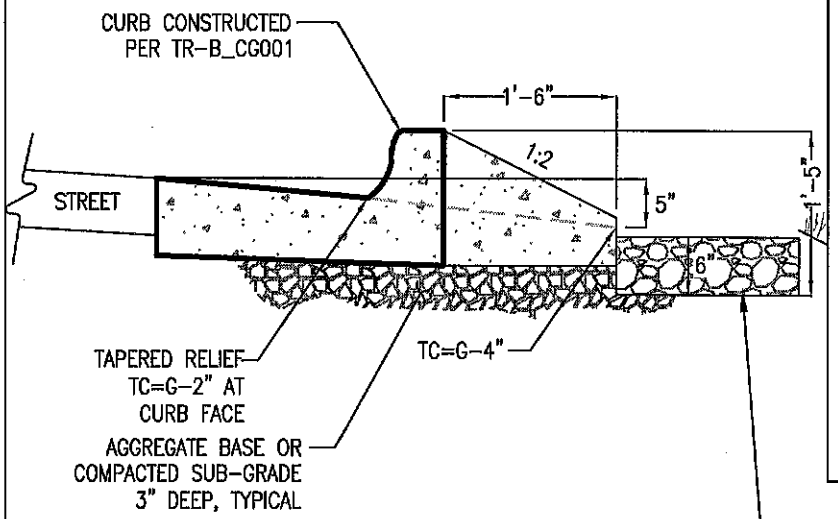

TC=TOP OF CONCRETE G=GUTTER

SECTION A-A

N.T.S.

SMALL COMMERCIAL GUIDE TYPICAL DETAILS

INLET – CURB CUT

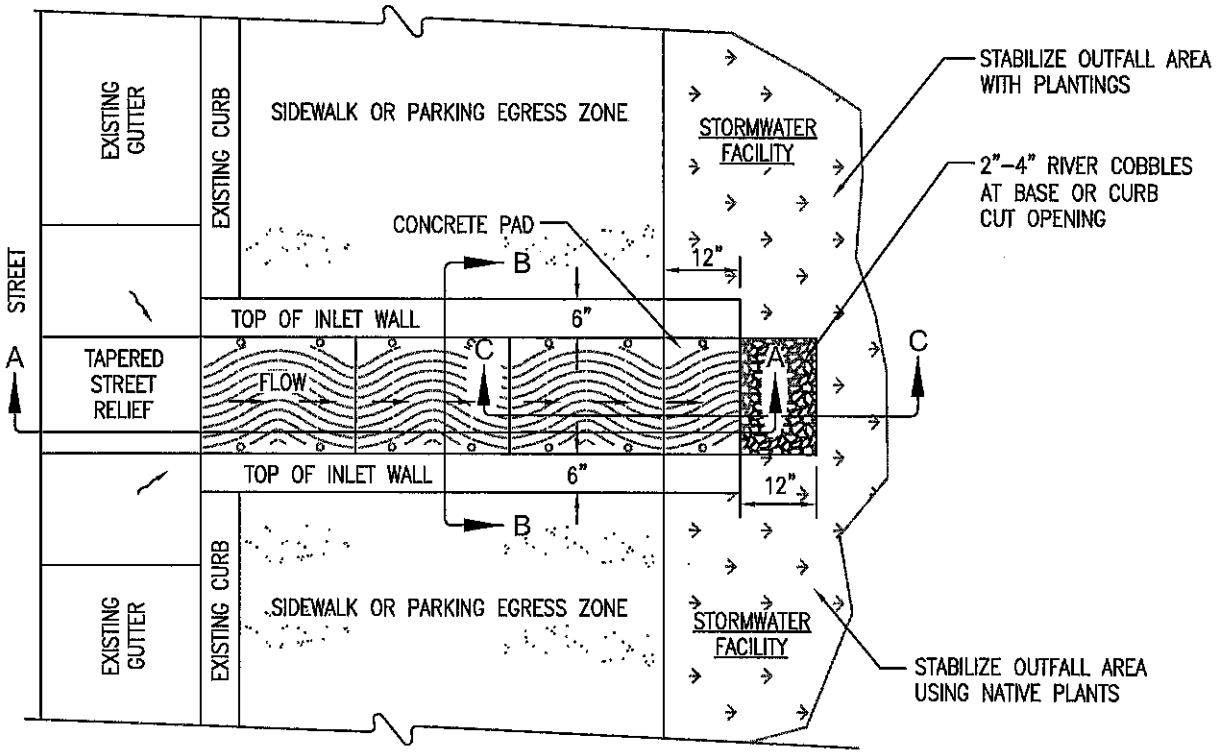

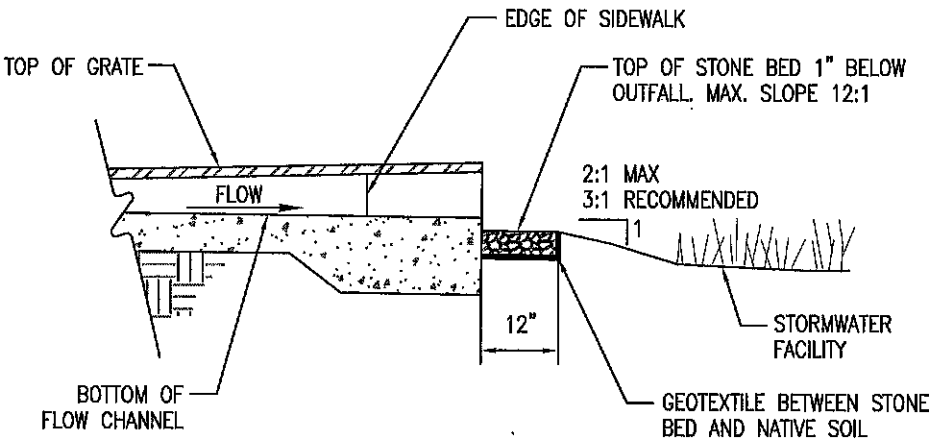

SECTION C-C

N.T.S.

SMALL COMMERCIAL GUIDE TYPICAL DETAILS

INLET – TRENCH DRAIN

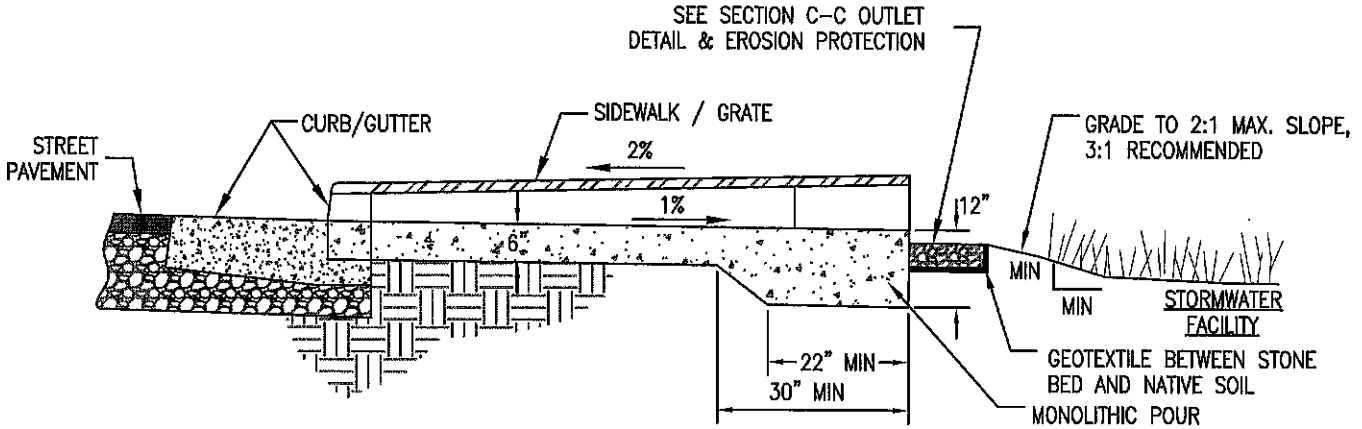

SECTION A-A

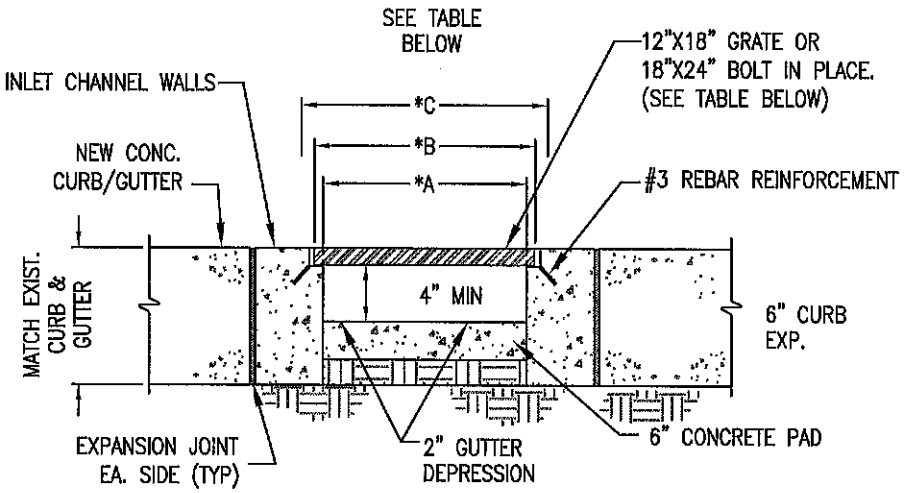

SECTION B-B

*TRENCH GRATING

A TRENCH WIDTH	B GRATE WIDTH	C FRAME WIDTH
10"	11 7/8"	12 1/8"
16"	17 7/8"	18 1/8"

NOTE:
MAXIMUM GRATE HOLE WIDTH (OPEN)
1/4 INCH. GRATE SIZE 12" X 18"
OR 18"X24".

N.T.S.

SMALL COMMERCIAL GUIDE TYPICAL DETAILS

INLET – TRENCH DRAIN

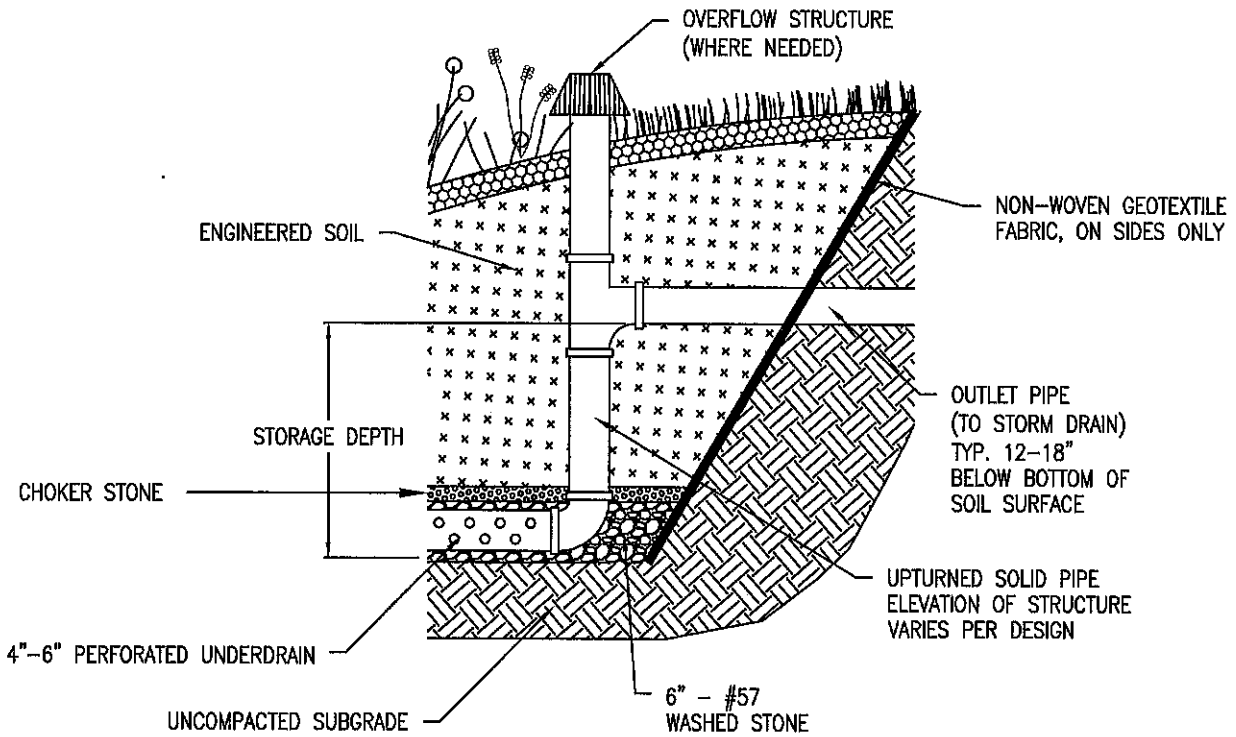

UPTURNED "S" UNDERDRAIN FOR GREEN INFRASTRUCTURE PRACTICES WITH SURFACE PONDING AND ENGINEERED SOIL

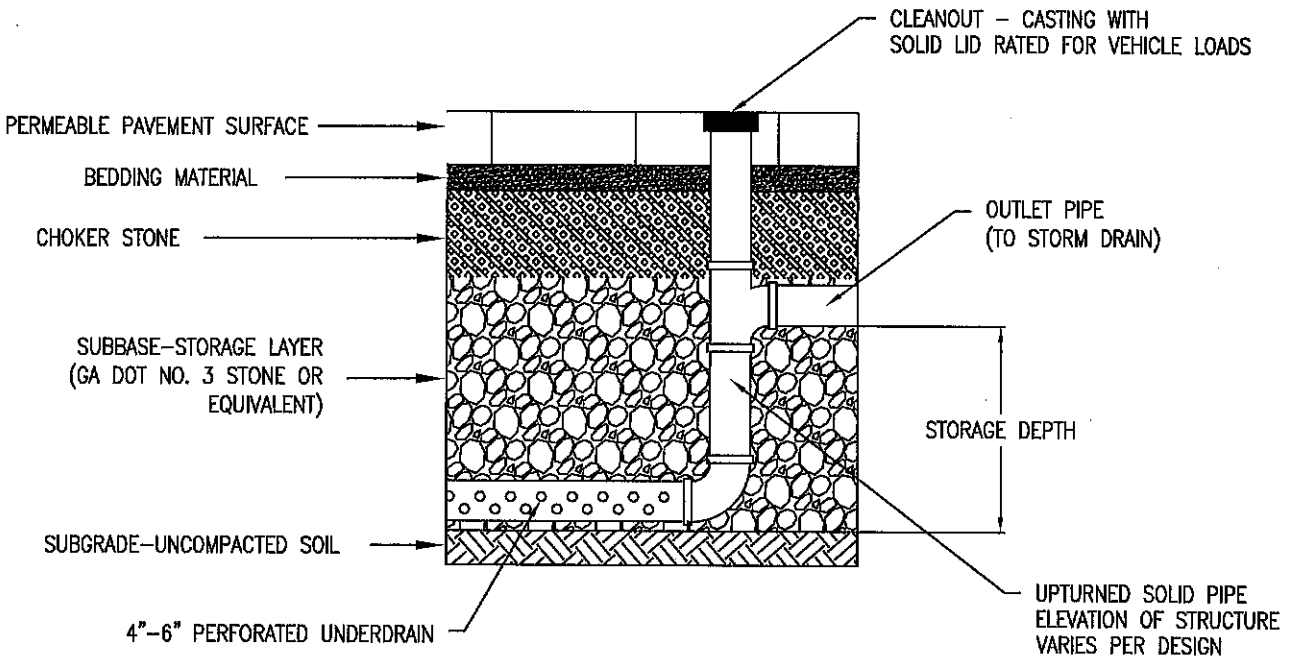

UPTURNED "S" UNDERDRAIN FOR PERMEABLE PAVEMENT SYSTEMS

N.T.S.

SMALL COMMERCIAL GUIDE TYPICAL DETAILS

UPTURNED "S" UNDERDRAIN

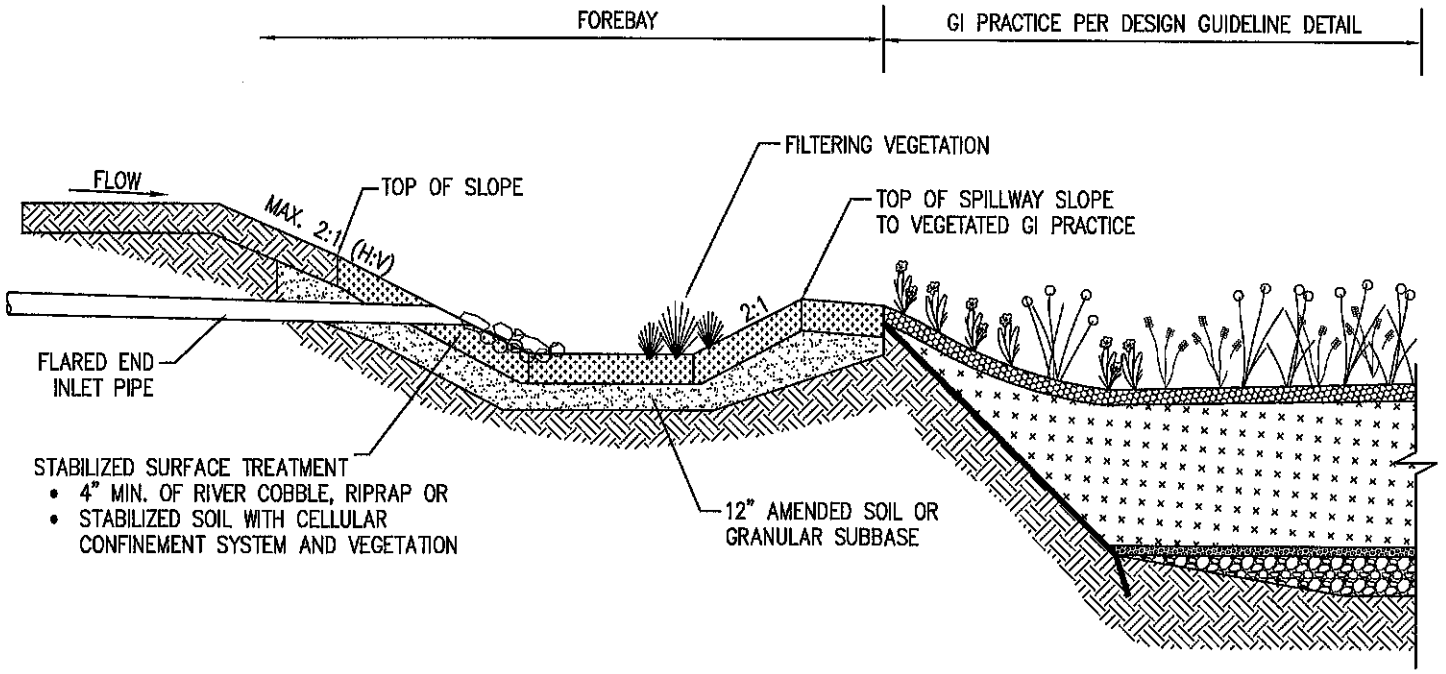

SEDIMENT FOREBAY NOTES:

1. THE MAIN GOAL OF PRE-TREATMENT FILTERING IS TO CAPTURE FLOATABLES, DEBRIS, GREASE, OILS, SILT AND SEDIMENT WHERE THEY CAN BE EASILY CLEANED AT THE SURFACE OF THE GI PRACTICE THROUGH REGULAR MAINTENANCE, AND BEFORE THEY HAVE THE OPPORTUNITY TO CLOG THE PRACTICE.
2. WHEN CONCENTRATED FLOW IS DIRECTED TO A GI PRACTICE THROUGH CURB TURNOUTS OR PIPE OUTLETS, A SEDIMENT FOREBAY SHOULD BE USED TO ALLOW MATERIAL TO BE CAPTURED WHERE IT CAN BE EASILY CLEANED.
3. A SEDIMENT FOREBAY SHOULD BE SIZED AND DESIGNED SO THAT IS INTEGRATED INTO THE GI PRACTICE AREA.
4. THE FOREBAY SHOULD BE SIZED TO CONTAIN 10% OF THE OVERALL VOLUME DIRECTED TO THE GI PRACTICE.
5. IF HIGH RUNOFF VELOCITY IS A POTENTIAL PROBLEM, SOME TYPE OF ENERGY DISSIPATION DEVICE MUST BE INCORPORATED.
6. DIRECT MAINTENANCE ACCESS TO THE FOREBAY MUST BE PROVIDED.
7. EXIT VELOCITIES FROM THE FOREBAY MUST BE NON-EROSIVE.
8. THE BOTTOM OF THE FOREBAY MAY BE PAVED OR LINED WITH A HARDENED MATERIAL OR IMPERMEABLE LINER TO MAKE SEDIMENT REMOVAL EASIER.
9. A FIXED VERTICAL SEDIMENT DEPTH MARKER MUST BE INSTALLED IN THE FOREBAY TO MEASURE SEDIMENT DEPOSITION OVER TIME.
10. SEDIMENT REMOVAL IN THE FOREBAY SHALL OCCUR WHEN IT IS FILLED TO 50% OF CAPACITY.
11. ALL DISTURBED AREAS MUST BE IMMEDIATELY STABILIZED AFTER CONSTRUCTION TO MINIMIZE EROSION.

N.T.S.

SMALL COMMERCIAL GUIDE TYPICAL DETAILS

PRETREATMENT: FOREBAY

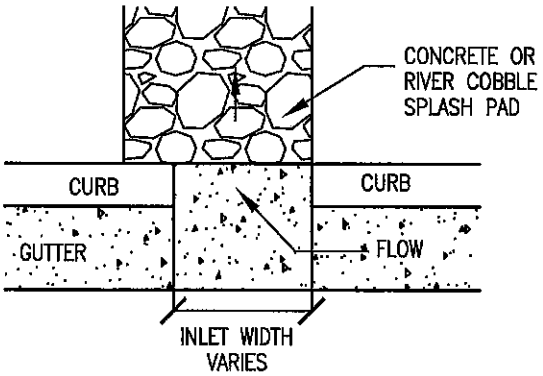

DROP INLET– PLAN

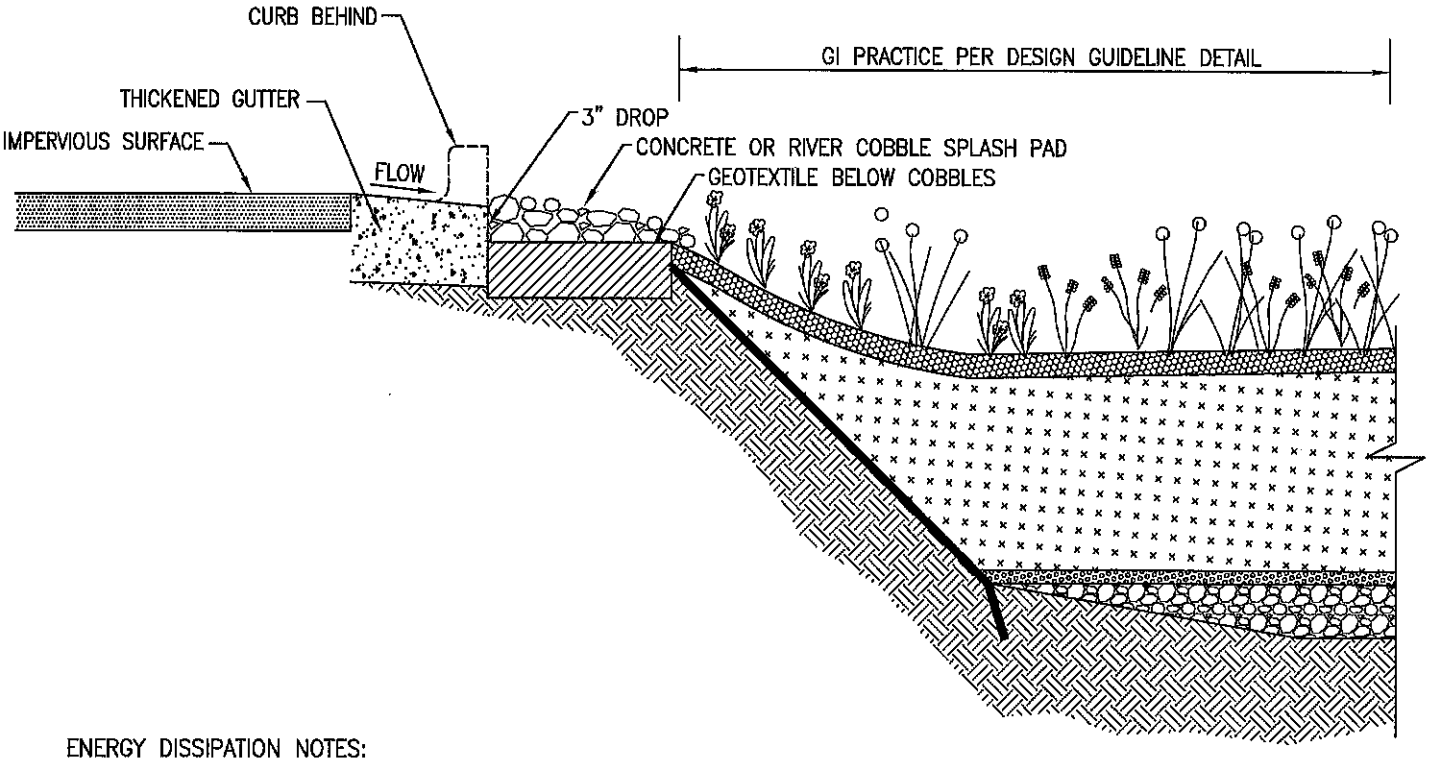

ENERGY DISSIPATION NOTES:

1. SIZE DEPRESSED CURB INLETS TO ACCOMMODATE DESIRED FLOWS.
2. INLETS AND GUTTER MAY BE MODIFIED TO ADJUST FLOW INTO GI PRACTICE.
3. CONVEYANCE TO AND FROM GI PRACTICES SHALL ENSURE NON–EROSIVE CONDITIONS. ENERGY DISSIPATION SHALL BE PROVIDED FOR CONCENTRATED DISCHARGES FROM PAVEMENT CURB TURNOUTS, DOWNSPOUTS, SWALES, PIPE OUTLETS, OR OTHER FLOW CONCENTRATING ELEMENT USING A PLUNGE AREA, ROCKS, SPLASH BLOCKS, STONE CHECK DAMS, LEVEL SPREADER, OR OTHER ENERGY DISSIPATION MEASURE.
4. FOR SLOPED APPLICATIONS, A SERIES OF GI PRACTICES CAN BE TERRACED TO CONVEY WATER NON–EROSIVELY.

N.T.S.

SMALL COMMERCIAL GUIDE TYPICAL DETAILS

PRETREATMENT: SHEET FLOW OFF A DEPRESSED CURB WITH A 3" DROP INLET– SECTION

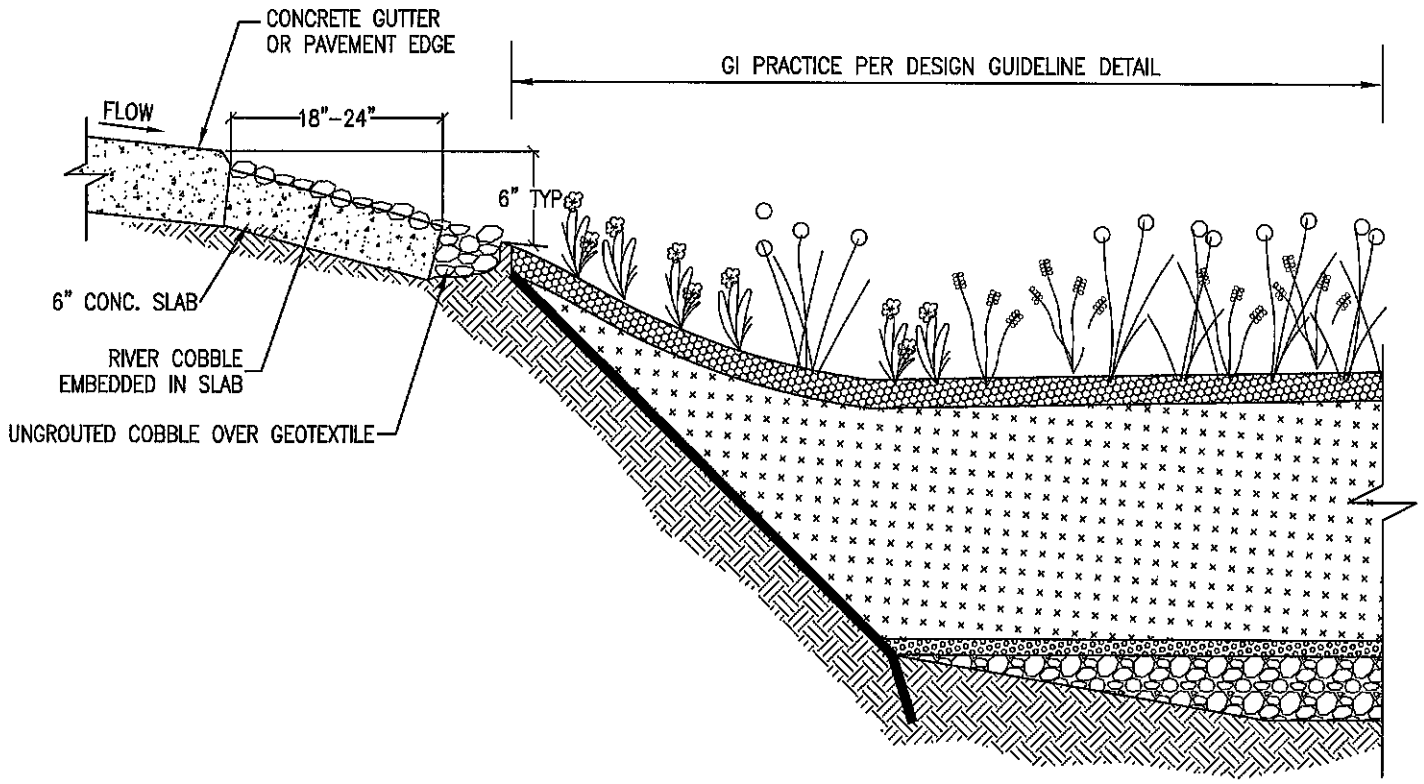

ENERGY DISSIPATION NOTES:

1. CONVEYANCE TO AND FROM GI PRACTICES SHALL ENSURE NON-EROSIVE CONDITIONS. ENERGY DISSIPATION SHALL BE PROVIDED FOR CONCENTRATED DISCHARGES FROM PAVEMENT CURB TURNOUTS, DOWNSPOUTS, SWALES, PIPE OUTLETS, OR OTHER FLOW CONCENTRATING ELEMENT USING A PLUNGE AREA, ROCKS, SPLASH BLOCKS, STONE CHECK DAMS, LEVEL SPREADER, OR OTHER ENERGY DISSIPATION MEASURE.

2. FOR SLOPED APPLICATIONS, A SERIES OF GI PRACTICES CAN BE TERRACED TO CONVEY WATER NON-EROSIVELY.

N.T.S.

SMALL COMMERCIAL GUIDE TYPICAL DETAILS

PRETREATMENT: RIVER COBBLE DIAPHRAGM

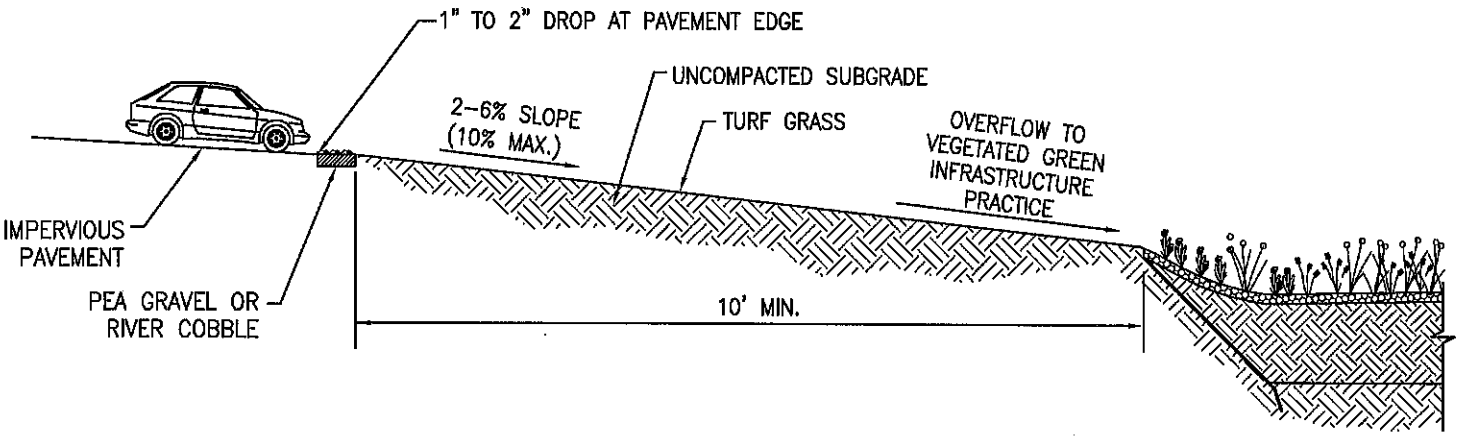

FILTER STRIP NOTES:

1. THE MAIN GOAL OF PRE-TREATMENT FILTERING IS TO CAPTURE FLOATABLES, DEBRIS, GREASE, OILS, SILT AND SEDIMENT WHERE THEY CAN BE EASILY CLEANED AT THE SURFACE OF THE GI PRACTICE THROUGH REGULAR MAINTENANCE, AND BEFORE THEY HAVE THE OPPORTUNITY TO CLOG THE PRACTICE.
2. FILTER STRIPS CAN BE USED EFFECTIVELY AS PRE-TREATMENT MEASURES AND CAN PROVIDE ENERGY DISSIPATION WITH THE ADDITION OF A LEVEL SPREADER, CHECK DAMS, OR ROCK DIAPHRAGM.
3. ENSURE THAT FLOWS IN EXCESS OF THE DESIGN FLOW CAN MOVE ACROSS AND AROUND THE FILTER STRIP WITHOUT DAMAGE.
4. THE SLOPE OF THE FILTER STRIP SHOULD BE BETWEEN 2% AND 6% FOR OPTIMUM PERFORMANCE.
5. THE SLOPE OF A FILTER STRIP MUST NOT EXCEED 10%.
6. THE WIDTH OF THE FILTER STRIP SHOULD BE EQUAL TO THE WIDTH OF THE RECEIVING GI PRACTICE.
7. ALL DISTURBED AREAS MUST BE IMMEDIATELY STABILIZED AFTER CONSTRUCTION TO MINIMIZE EROSION.

N.T.S.

SMALL COMMERCIAL GUIDE TYPICAL DETAILS

PRETREATMENT: GRASS FILTER STRIP

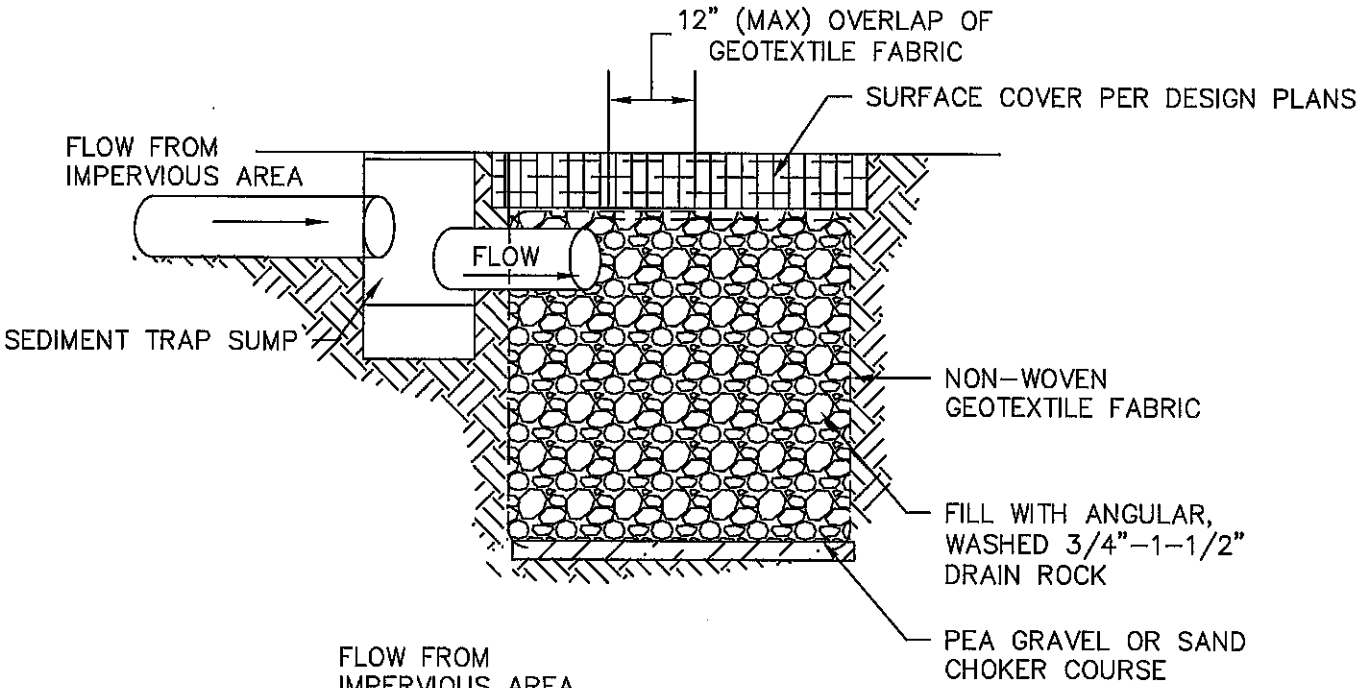

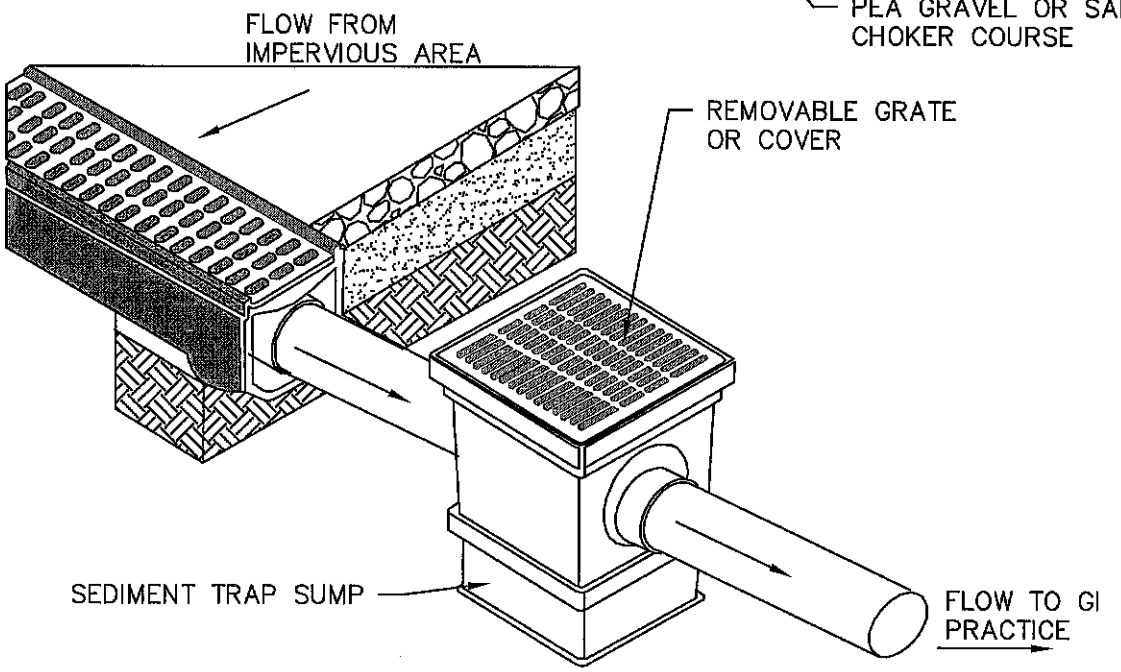

SUMP INLET IN-LINE PIPE TREATMENT

NOTES:

1. INSTALL PRETREATMENT SEDIMENT TRAP WHEN INFILTRATING FLOWS WITH HIGH SEDIMENT LOADS.
2. DESIGN SUMP TO HAVE ONE CUBIC FOOT OF STORAGE FOR EVERY 100 SQUARE FEET OF IMPERVIOUS AREA DRAINING TO SEDIMENT TRAP.
3. SUMP CAN BE PRECAST CONCRETE, PVC, OR HDPE.

N.T.S.

SMALL COMMERCIAL GUIDE TYPICAL DETAILS

PRETREATMENT: SEDIMENT TRAP SUMP

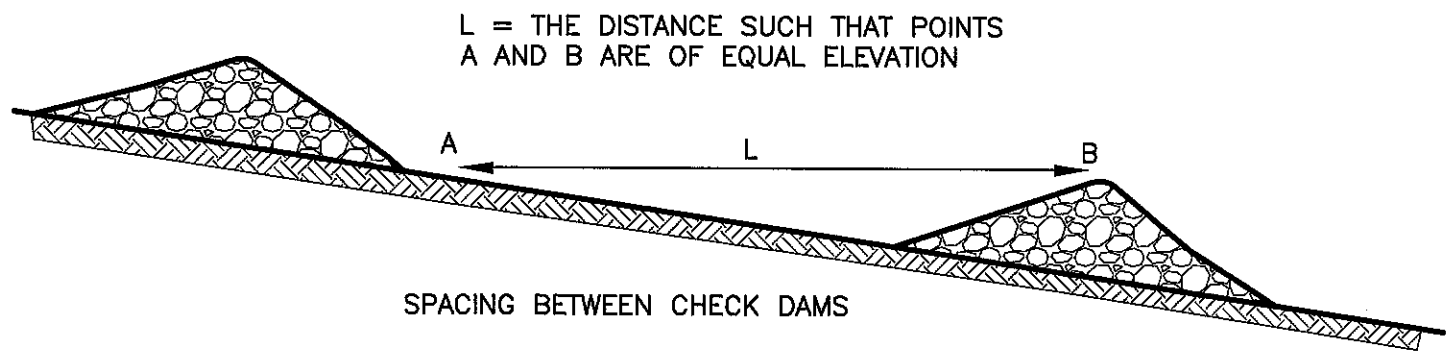

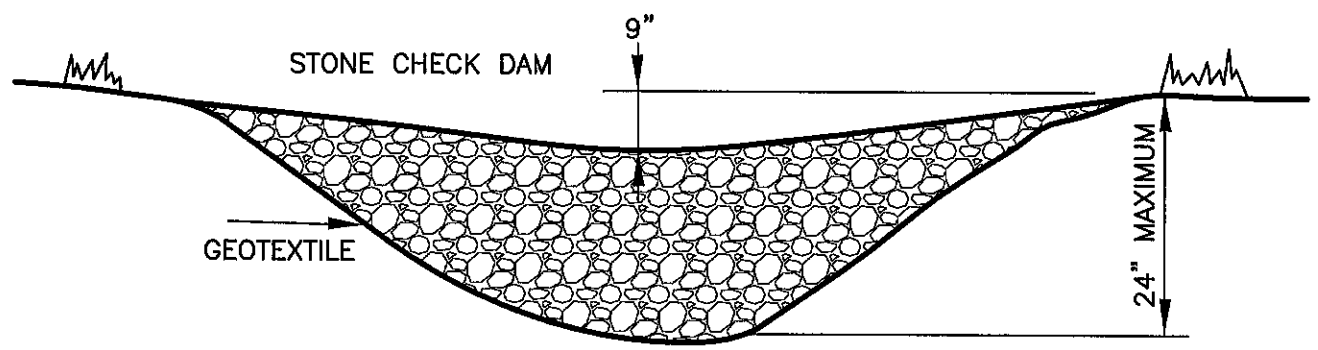

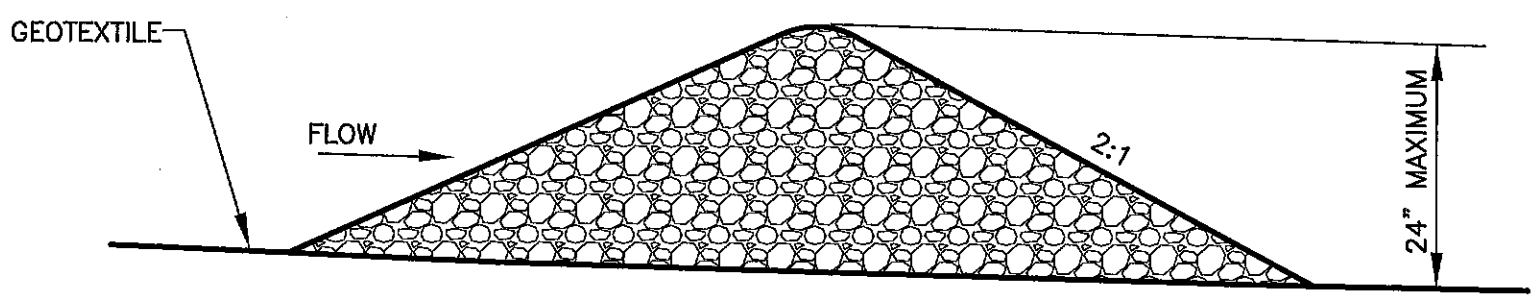

Cd–S CHECK DAM (STONE)

STONE CHECK DAMS

STONE CHECK DAMS SHOULD BE CONSTRUCTED OF GRADED SIZE 2–10" STONE. MECHANICAL OR HAND PLACEMENT SHALL BE REQUIRED TO INSURE COMPLETE COVERAGE OF ENTIRE WIDTH OF DITCH OR SWALE, AND THAT CENTER OF DAM IS LOWER THAN EDGES.

MAINTENANCE

PERIODIC INSPECTION AND REQUIRED MAINTENANCE MUST BE PROVIDED. SEDIMENT SHALL BE REMOVED WHEN IT REACHES A DEPTH OF ONE–HALF THE ORIGINAL DAM HEIGHT OR BEFORE. IF THE AREA IS TO BE MOWED, CHECK DAMS SHALL BE REMOVED ONCE FINAL STABILIZATION HAS OCCURRED. OTHERWISE, CHECK DAMS MAY REMAIN IN PLACE PERMANENTLY. AFTER REMOVAL, THE AREA BENEATH THE DAM SHALL BE SEEDED AND MULCHED IMMEDIATELY.

THIS DETAIL WAS TAKEN FROM THE CITY OF ATLANTA'S WEBSITE. IT MAY HAVE BEEN MODIFIED AND SHOULD BE REVIEWED THOROUGHLY.

City of Atlanta

STANDARD DETAILS

CHECKDAM
STONE

REV.
DATE: SEPT 2011
ORIG. DATE: NOV 2004
SCALE: N.T.S.

DETAIL NO. ER–G_CD001

APPENDIX C – Infiltration Testing Parameters

General

Hydrologic soil groups are based on estimates of runoff potential. Soils in the United States are assigned to one of four groups (A, B, C, and D) by the Natural Resource Conservation Service. The soils are assigned to a group according to the rate of water infiltration when the soils are not protected by vegetation, are thoroughly wet, and receive precipitation from long-duration storms. The groups are defined as follows:

Group A: Soils having a high infiltration rate (low runoff potential) when thoroughly wet. These consist mainly of deep, well-drained to excessively drained sands or gravelly sands. These soils have a high rate of water transmission.

Group B: Soils having a moderate infiltration rate when thoroughly wet. These consist chiefly of moderately deep or deep, moderately well-drained or well-drained soils that have moderately fine texture to moderately coarse texture. These soils have a moderate rate of water transmission.

Group C: Soils having a slow infiltration rate when thoroughly wet. These consist chiefly of soils having a layer that impedes the downward movement of water, or soils of moderately fine texture or fine texture. These soils have a slow rate of water transmission.

Group D: Soils having a very slow infiltration rate (high runoff potential) when thoroughly wet. These consist chiefly of clays that have a high shrink-swell potential, soils that have a high water table, soils that have a claypan or clay layer at or near the surface, and soils that are shallow over nearly impervious material. These soils have a very slow rate of water transmission.

Typical soil infiltration rates by type are listed in Table C-1.

Table C-1. Typical Infiltration Rates by Soil Type

Soil Type	A	B	C	D
Typical Infiltration Rate Range (inches/hour)	> 0.4	0.15–0.4	0.05–0.15	< 0.05

Site Soils

- Well-drained A and B soils provide the best opportunity for infiltration and successful long-term performance of all types of GI Practices.
- Type C soils can be tilled to improve initial infiltration, and the use of bioretention with appropriate deep-root plants has proven successful in these conditions.
- Sites with D soils, a high water table, or bedrock near the surface should use GI Practices for filtering and storing runoff. Infiltration may be applied in D soils with appropriately documented infiltration testing.

Figure C-1. Double-Ring Infiltrometer

Infiltration Testing

Because it is important to establish the infiltrative performance of the soils at the location and interface of the bottom of the GI Practice with the subgrade, on-site testing is required to obtain the infiltration rates to be used in the design calculations. A variety of field tests exists for determining the infiltration capacity of a soil. Laboratory tests are not recommended, because a homogeneous laboratory sample does not represent field conditions.

Infiltration tests should not be conducted in the rain, within 24 hours of significant rainfall events (>0.5 inch), or when the temperature is below freezing. At least one test should be conducted at the bottom elevation of the GI Practice, and a minimum of two tests per GI Practice is recommended. Personnel conducting infiltration tests should be prepared to adjust test locations and depths depending on observed conditions.

Typical methodologies include:

- Double-ring infiltrometer test: A double-ring infiltrometer test estimates the vertical movement of water through the bottom of the test area. The outer ring helps to reduce the lateral movement of water to the soil from the inner ring. The results from this test, generally reported in centimeters per second (cm/sec) or inches per hour (in/hour), are appropriate for use in the GI Practice sizing tables provided in the Design Guidelines.
- Percolation test: A percolation test allows water movement through both the bottom and sides of the test area. For this reason, the measured rate of water level drop in a percolation test must be adjusted to account for the exfiltration occurring through the side interface of the test area.

  The final percolation rate should be adjusted for each test according to the following formula.

  Infiltration Rate = (Percolation Rate)/(Reduction Factor)

  Where the Reduction Factor is given by:

  $$\mathbf{Rf = (2d1 - \Delta d)/DIA + 1}$$

  With:

  d1 = initial water depth (in)
  Δd = average/final water level drop (in)
  DIA = diameter of the percolation test area hole (in)

- Geotechnical investigations may include laboratory test results for permeability (K), which is typically reported in cm/sec. This information can be used for conceptual design and sizing of GI Practices, but field testing should be completed for final design calculations.
- If additional geotechnical investigations are not performed for the project, or if results do not indicate the seasonal high groundwater elevation, a hole must be excavated to a minimum of 2 feet below the bottom interface of the GI Practice with the subgrade to confirm that the seasonal high groundwater elevation or bedrock is not within 2 feet of the bottom of the GI Practice.

APPENDIX D – Planting List and Example Planting Plans

Introduction

Landscaping is a critical element to improve both the function and appearance of GI Practices. Vegetation should be selected based on soil depth, sun exposure, water tolerance, salt tolerance, and other environmental conditions. This Appendix provides general landscape guidance, plant selection guidance for effective stormwater GI Practices, and two example bioretention parking lot island planting plans.

General Landscape Guidance

The design for plantings of vegetated stormwater facilities should minimize the need for herbicides, fertilizers, and pesticides at any time before, during, and after construction. After the planting has been established, the use of herbicides, fertilizers, and pesticides is highly discouraged.

The successful growth of plants, shrubs, and trees in GI practices is highly dependent on the soil depth. The following table provides the appropriate soil depth and plant type for GI practices.

Soil Depth (inches)	Vegetation
24	grasses/perennials
36 (minimum)	shrubs/trees
42–48 (optimum)	shrubs/trees

The planting plan shall include a sequence of construction, a description of the contractor's responsibilities, a planting schedule and installation specifications, initial maintenance requirements, and a warranty period stipulating requirements for plant survival.

Recommended Plants

Bioretention, Planters, and Bioswales

Plants for bioretention and other GI practices must be able to tolerate both wet and dry conditions. This list, while not exhaustive, includes many plants that will tolerate conditions in bioretention areas. The plants in this list have different preferences for both moisture and light, as shown in the columns labeled “Moisture” and “Sun.” Additionally, most of these plants are native to Georgia and thus contribute the added benefit of providing habitat and food for native pollinators and wildlife. Plants that are not native to Georgia are marked with an asterisk (*). At the end of this Appendix are two example planting plans for bioretention parking lot islands.

Key

Height: Typical height range for mature plants
Moisture: The amount of soil moisture that plants will tolerate is defined as follows:

W (Wet)	Frequently saturated soils
M (Moist)	Moist soils that are periodically inundated
D (Dry)	Areas not flooded after rains and frequently dry between rains; plants designated “D” will tolerate drought conditions

Sun: the amount of sunlight that plants require is defined as follows:

F (Full)	Direct sunlight for at least 6 hours per day
P (Partial shade)	Direct sunlight for 3 to 6 hours per day, or lightly filtered light all day
S (Shade)	Less than 3 hours of direct sunlight per day, or heavily filtered light all day

	Botanical Name	Common Name	Height	Moisture	Sun
Small Trees	Acer floridanum	Southern Sugar Maple	20'-25'	M	F/P/S
	Amelanchier arboria	Serviceberry	15'-25'	M/D	F/P
	Cercis canadensis	Redbud	20'-30'	M	F/P
	Chionanthus virginicus	Fringe Tree	12'-20'	M	F/P
	Hamamelis virginiana	Witchhazel	15'-30'	W/M	P/S
	Ilex deciduas	Possumhaw	15'-25'	M/D	F/P
	Ilex vomitoria	Yaupon Holly	20'-25'	M/D	F/P
	Lagerstroemia indica	Crape Myrtle	15'-50'	M/D	F/P
	Magnolia virgininana	Sweetbay Magnolia	10'-30'	W/M	F/P
	Magnolia x soulangeana *	Saucer Magnolia *	15'-25'	M	F/P
	Sassafras albidum	Sassafras	30'-60'	M/D	F/P

	Botanical Name	Common Name	Height	Moisture	Sun
Med.-Large Trees	Acer rubrum	Red Maple	60'–90'	W/M/D	F/P
	Betula nigra	River Birch	40'–70'	W/M	F/P
	Carpinus caroliniana	Musclewood	30'–50'	W/M	F/P
	Crataegus phaenopyrum	Washington Hawthorne	25'–30'	W/M/D	F/P
	Fraxinux pennsylvanica	Green Ash	50'–70'	W/M/D	F
	Ilex opaca	American Holly	30'–60'	M/D	F/P
	Magnolia grandiflora	Southern Magnolia	40'–80'	M/D	F/P
	Magnolia macrophylla	Bigleaf Magnolia	30'–40'	M	F/P
	Nyssa sylvatica	Black Gum	35'–70'	W/M/D	F/P
	Platanus occidentalis	American Sycamore	75'–100'	W/M	F
	Quecus lyrata	Overcup Oak	35'–50'	M/D	F
	Quercus bicolor	Swamp White Oak	50'–60'	W/M/D	F/P
	Quercus michauxii	Swamp Chestnut Oak	60'–80'	W/M	F
	Quercus phellos	Willow Oak	60'–80'	W/M/D	F/P
	Salix babylonica *	Weeping Willow *	30'–50'	W/M	F
	Taxodium distichum	Bald Cypress	50'–100'	W/M/D	F/P

	Botanical Name	Common Name	Height	Moisture	Sun
Shrubs–Evergreen	Ilex glabra	Inkberry	6'–8'	M/W	F/P
	Ilex vomitoria nana	Dwarf Yaupon	5'	W/M/D	F/P
	Illicium floridanum	Florida Anise Tree	10'–15'	M	P/S
	Illicium parviflorum	Small Anise Tree	7–10'	M/D	F/P
	Myrica cerifera	Southern Waxmyrtle	10–15'	W/M/D	F/P

	Botanical Name	Common Name	Height	Moisture	Sun
Shrubs–Deciduous	Callicarpa americana	Beautyberry	6'	M/D	F/P
	Cephalanthus occidentalis	Buttonbush	3–10'	W	F
	Clethra alnifolia	Summersweet	5'–10'	W/M/D	F/P
	Cornus amomum	Silky Dogwood	6'–12'	W/M	F/P/S
	Hibiscus moscheutos	Swamp Mallow	4'–8'	W/M	F/P
	Hypericum densiflorum	Bushy St Johns wort	4–6'	M/D	F/P
	Ilex verticillata	Winterberry	6'–10	W/M	F/P
	Itea virginica	Virginia Sweetspire	4'	W/M/D	F/P
	Lindera benzoin	Spicebush	6–12'	W/M/D	F/P
	Sambucus canadensis	Elderberry	6–'15'	W/M	F/P
	Viburnum acerifolium	Mapleleaf viburnum	3'–6'	M/D	M/S
	Viburnum dentatum	Arrowwood	5'–10'	W/M/D	F/P
	Viburnum nudum	Possumhaw	6'–12'	W/M/D	F/P/S

	Botanical Name	Common Name	Height	Moisture	Sun
Grasses and Allies	Acorus calamus	Sweet Flag	2'–4'	W/M	F/P
	Carex spp	Sedges	up to 3'	varies	varies
	Chasmanthium latifolium	River Oats	3'–5'	W/M/D	F/P/S
	Juncus effusus	Soft Rush	1'–4'	W/M	F/P/S
	Juncus tenuis	Path Rush	under 12"	W/M	F/P/S
	Liriope muscari *	Monkey Grass *	18"–24"	M/D	F/P/S
	Muhlenbergia cappliaris	Pink Muhly Grass	3'–4'	M/D	F/P
	Ophiopogon japonicus *	Mondo Grass *	under 12"	M/D	F/P/S
	Panicum virgatum	Switchgrass	2'–9'	M/D	F/P
	Schizachyrium scoparium	Little Bluestem	2'–4'	M/D	F/P
	Sorgasstrum nutans	Indiangrass	4'–8'	M/D	F/P

	Botanical Name	Common Name	Height	Moisture	Sun
Herbaceous Perennials	Amsonia hubrechtii	Narrow Leaf Blue Star	2'–3'	M/D	F/P
	Asclepias tuberosa	Butterflyweed	1'–3'	M/D	F/P
	Chrysogonum virginianum	Green and Gold	6"	M/D	P/S
	Coreopsis verticillata	Threadleaf Coreopsis	8"–20"	M/D	F/P
	Echinacea purpurea	Purple Cone Flower	1'–3'	M/D	F/P
	Eupatorium fistulosum	Joe Pye Weed	2'–7'	W/M/D	F/P
	Hemerocallis spp. *	Daylily *	1–3'	M/D	F/P
	Iris sibirica *	Siberian Iris *	1'–3'	W/M	F/P
	Iris virginica	Blue Flag Iris	12"–24"	W/M	F/P
	Lobelia cardinalis	Cardinal Flower	2'–4'	W/M	F/P/S
	Monarda didyma	Beebalm	2'–4'	W/M	F/P
	Osmunda cinnamomea	Cinnamon Fern	up to 4'	W/M	F/P/S
	Osmunda spectabilis	American Royal fern	2'–5'	W/M	P/S
	Phlox divaricata	Woodland Phlox	12"–18"	M	P/S
	Phlox stolonifera	Creeping Phlox	6"–12"	M/D	F/P/S
	Polystichum acrostichoides	Christmas Fern	1'–3'	M/D	P/S
	Rudbeckia fulgida	Orange Coneflower	18"–36"	M/D	F/P
	Rudbeckia hirta	Black–Eyed Susan	12"–36"	M/D	F/P/S
	Solidago spp.	Goldenrod	1–4'	varies	F/P
	Tiarella cordifolia	Foamflower	6"–12"	M	P/S

Infiltration Trenches

Infiltration trenches can be designed with a grass cover to aid pollutant removal and prevent clogging. The sand filter or trench is covered with permeable topsoil and planted with grass in a landscaped area. Properly planted, these facilities can be designed to blend into natural surroundings.

Grass should be capable of withstanding frequent periods of inundation and drought. Vegetated filter strips and buffers should fit into and blend with surrounding area. Native grasses are preferable, if compatible.

Design Constraints

- Do not plant trees or provide shade within 15 feet of an infiltration or filtering area or where leaf litter will collect and clog infiltration area.
- Do not locate plants in areas that block maintenance access to the facility.
- Sod areas with heavy flows that are not stabilized with erosion control matting.
- Divert flows temporarily from seeded areas until stabilized.
- Planting on any area requiring a filter fabric should include material selected with care to ensure that no tap roots will penetrate the filter fabric.

Bioswales and Grass Filter Strips

The following table provides a number of grass species that perform well in the stressful environment of an open channel structural control such as a bioswale or grass filter strips.

Botanical Name	Common Name	Notes
Cynodon dactylon	Bermuda grass	
Andropogon gerardii	Big Bluestem	Not for bioswales
Agrostis palustris	Creeping Bentgrass	
Festuca rubra	Red Fescue	Not for bioswales
Phalaris arundinacea	Reed Canary grass	Bioswales
Agrostis alba	Redtop	
Bromus inermis	Smooth Brome	Not for bioswales
Panicum virgatum	Switch Grass	

Note1: These grasses are sod forming and can withstand frequent inundation, and are thus ideal for the swale or grass channel environment. Most are salt-tolerant as well.

Note 2: Where possible, one or more of these grasses should be in the seed.

Note 3: In areas that need immediate stabilization, sod should be used.

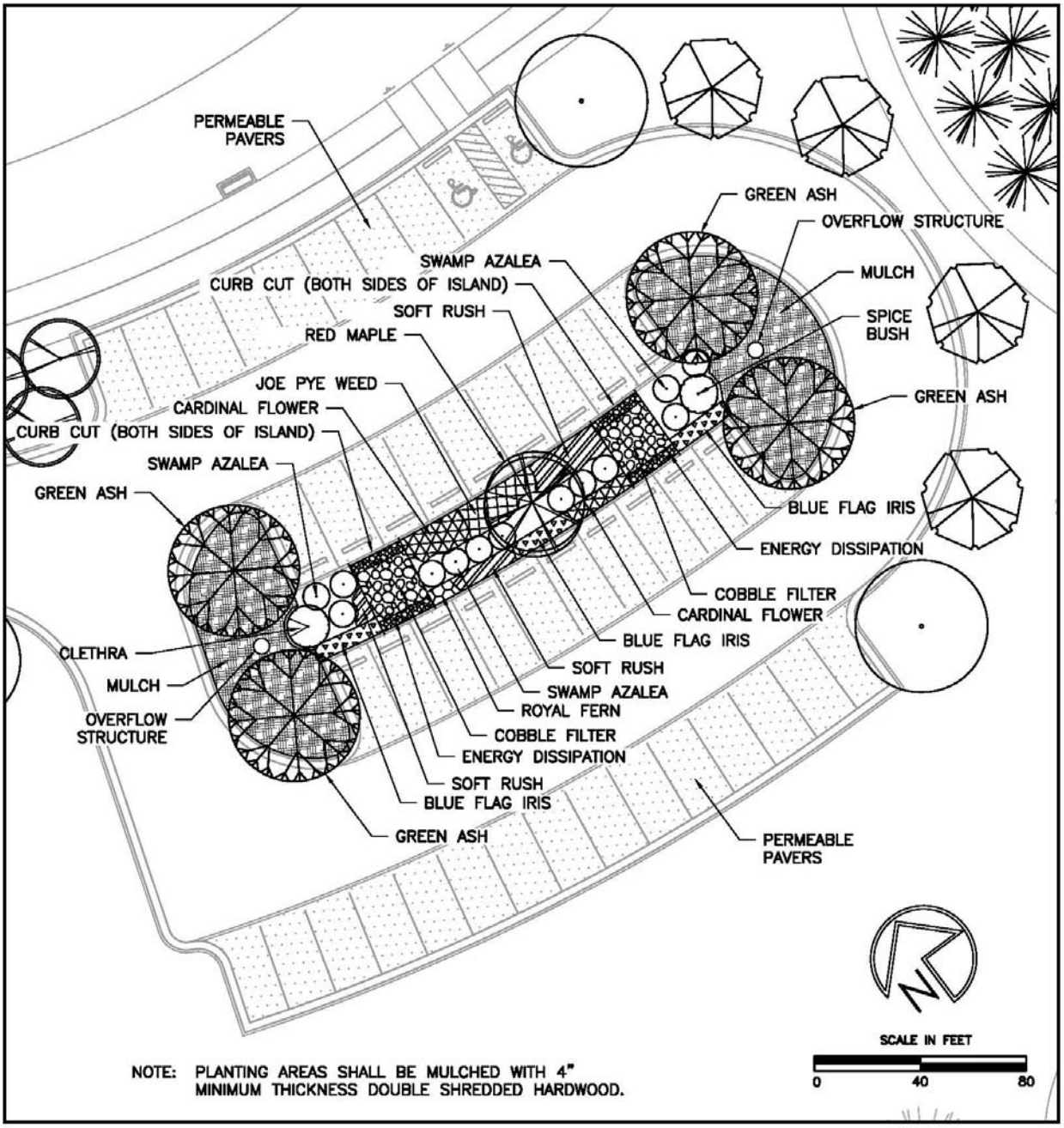

EXAMPLE #1: PARKING ISLAND BIORETENTION PLANTING

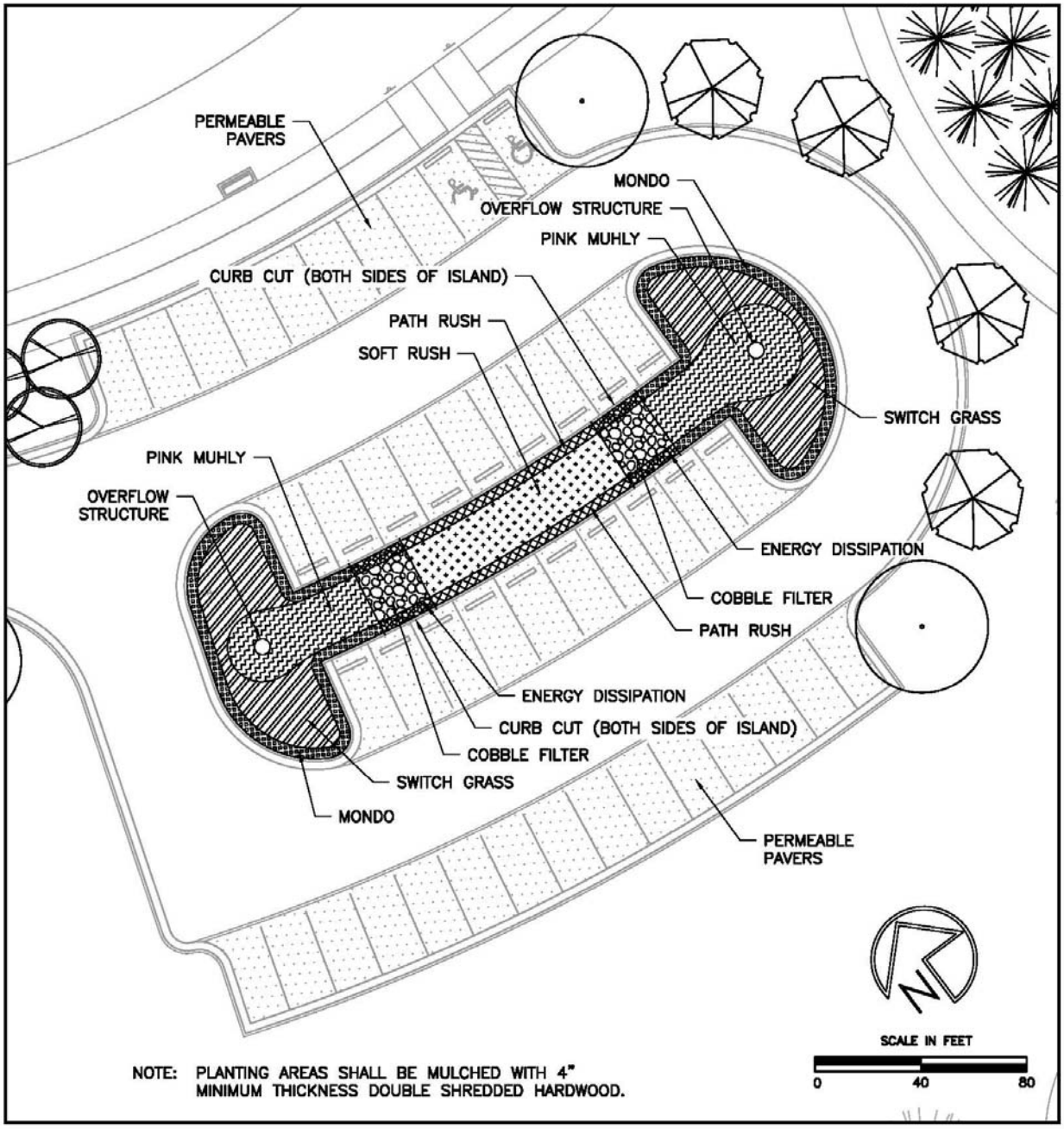

EXAMPLE #2: PARKING ISLAND BIORETENTION PLANTING

APPENDIX E – Sample Forms

Projects Requiring a Stormwater Consultation Meeting

The following projects are required to have a Consultation Meeting with Site Development staff to review the Stormwater Concept plan, prior to submittal of the BB / LD permit application:

Commercial Projects

- New developments that add any impervious surface OR disturb more than one acre of land.
- Redevelopment projects that add or replace more than 500 square feet of impervious surface OR disturb more than one acre of land.
- Demolition Projects that leave more than 500 square feet of impervious surface in place.

Residential Projects

- Projects reviewed for Preliminary Plat approval.
- New Multi-family, Townhome, Apartment, Subdivision (not individual lots), and Condo developments.

NOTES

- Call 404-330-6249 or email crayburn@atlantaga.gov to schedule a Consultation Meeting.
- Visit www.AtlantaWatershed.org/greeninfrastructure for more information regarding the Stormwater Concept Plan and Consultation Meeting.
- If the proposed project is exempt from the Post-Development Stormwater Management Ordinance, Section 74-504 (d), no consultation meeting is necessary.
- The construction of a new home on an individual lot must manage the first 1.0" of runoff onsite; however, **no consultation meeting is necessary** prior to permit application. See the above website for additional information on Green Infrastructure on residential lots.
- New Developments take place on parcels that are wooded or have never been developed. Redevelopment projects occur on sites that are currently developed or have previously been developed.
- Once the Consultation Meeting takes place, the Applicant will be given a copy of the Meeting Record to include as part of the BB / LD application packet.

STORMWATER CONCEPT PLAN AND CONSULTATION MEETING RECORD

DEPARTMENT OF WATERSHED MANAGEMENT

CITY OF ATLANTA

Contact the Site Development Office, 404-330-6249, to schedule a meeting time.

Site Name _____ Project Representative _____

Address _____ Watershed Representative_____

Date of Meeting Request_____ Date of Meeting_____

For applicable developments (see below), a stormwater concept plan and consultation meeting is required early in the design process. The project's engineer and Site Development staff shall discuss the post-development stormwater management measures necessary for the proposed project and to assess constraints, opportunities and ideas for better site design, green infrastructure and runoff reduction techniques early in the design process. This consultation meeting shall be held **prior to** submittal of an application for a building permit (BB) or land disturbance permit (LD).

Per the City of Atlanta's Post Development Stormwater Management Ordinance, the project's engineer must present a Stormwater Concept Plan to Site Development Staff for the following activities:

- New commercial development (Greenfield) that involves the creation of **any** impervious cover;
- Commercial redevelopment that includes the creation, addition, or replacement of 500 square feet of impervious cover or more;
- Commercial development or redevelopment that disturbs one acre of land or more; and,
- Commercial demolition projects that leave in place more than 500 square feet of impervious cover.

For more information regarding the applicability and exemptions of the City's Post Development Stormwater Management ordinance, see Chapter 74-Environment, Article X. Section 74-504 of the city code.

The Stormwater Concept Plan should include the following:

_____ Project description;

_____ A preliminary survey showing the following:

  _____ Property lines, existing conditions, general topography, general soil conditions, easements, and adjacent rights-of-way;

  _____ Location of all state waters, wetlands, applicable buffers, and floodplains;

_____ Any critical areas of the site which may affect the control of stormwater during and post-construction (steep slopes, eroded areas, buffers, invasive species, existing stormwater infrastructure, undersized culverts, floodplains, wetlands, etc.);

_____ A conceptual grading plan;

_____ Location and limit of proposed structures, land disturbing activities, demolition, and impervious surfaces;

_____ Infiltration rates shall be determined by soil surveys, on-site soil analysis, double-ring infiltrometer or percolation test. If a site has been previously developed or graded or contains urban soil types, a double-ring infiltrometer or percolation test is required. The test locations must be in the region where infiltration practices are proposed at the appropriate depth; and,

_____ Preliminary selection and location of proposed structural stormwater controls; location of existing and proposed conveyance systems such as grass channels, swales, and storm drains; flow paths; relationship of site to upstream and downstream properties and drainages; and preliminary location of proposed stream channel modifications, such as bridge or culvert crossings.

Site Name_____

Date_____

Prior to the issuance of a permit, a stormwater management plan must adequately address the following principles as required in the City's Post Development Stormwater ordinance, the Georgia Stormwater Management Manual (Blue Book), and the Coastal Stormwater Supplement (CSS):

_____ **Runoff Reduction (RR) and Green Infrastructure (GI)**: Discuss RR formula, infiltration techniques, better site design and limiting impervious surface, offsite drainage, rainwater harvesting, and GI incentives: 1) credit system in accordance with the CSS, 2) 1.0" runoff reduction vs. 1.2" water quality, 3) hardscape exemption, 4) for small commercial redevelopment sites involving less than 5,000 square feet of impervious surface (new or replaced), Stream Channel Protection, Overbank Flood, and Extreme Flood Protection will be waived if RR requirements are met, 5) rainwater harvesting techniques and potential water/sewer bill savings;

_____ **Water Quality**: Discuss exemption if 1.0" RR is provided, multiplier, credit system, high risk operations, hot spots, and proprietary devices. If the 1.0" runoff volume cannot be reduced on site (RR requirement), engineer must provide a written analysis as to why and appropriate documentation to support the claim during BB or LD plan review process. If proprietary measures are proposed, provide all necessary documentation (See Chapter 3.3.10.2 of the Blue Book for guidelines for using proprietary systems). Staff will determine the appropriateness of said proprietary device based on site conditions;

_____ **Stream Channel Protection**: Discuss preservation of buffers, 24-hr extended release of 1-year, 24-hr rainfall event, velocity dissipation, and waivers (< 2.0 cfs **OR** discharging into larger systems where streambank and channel stabilization will not be affected);

_____ **Overbank Flood Protection**: Discuss new vs. redevelopment rate reduction requirements, what is considered pre-development impervious cover, and the formula for calculating rate reduction on redevelopment sites up to 25-yr storm:

(%PIC)/2 = %PDRR

PIC = Pre-development Impervious Cover

PDRR = Peak Discharge Rate Reduction;

_____ **Extreme Flood Protection**: Discuss new requirement (peak discharge rate reduction does not apply to 100-yr storm event), no increase allowed from pre- to post-development peak discharge rate for 100-year storm event, etc.;

_____ **Downstream Analysis**: Discuss size of basin to be studied, any known downstream flooding or drainage issues, etc.;

_____ **Operations and Maintenance Plan / Inspections and Maintenance Agreement**: Discuss maintenance requirements.

NOTE: Signature on this document does **NOT** constitute design approval, nor is it intended as a comprehensive list of all issues. Signature authorizes applicant to proceed with application for a land development/building permit. Issues identified must be addressed prior to plan approval by Site Development.

FOR ADMINISTRATIVE USE ONLY

Issues Discussed	Potential Opportunities and Comments
o Stream buffer	_____
o Wetland	_____
o Floodplain	_____
o Easement	_____
o Steep slope	_____
o RR limitations	_____
o Other	_____

Reviewed by: _____ _____

(Print Name) (Signature)

Kasim Reed
MAYOR

CITY OF ATLANTA
DEPARTMENT OF WATERSHED MANAGEMENT
72 MARIETTA STREET NW
ATLANTA, GEORGIA 30303

Jo Ann J. Macrina, PE
COMMISSIONER

Engineer's Certificate
Green Infrastructure Practices

I, _____, a registered professional engineer in the State of Georgia, hereby certify with my signature and seal, that the Green Infrastructure (Runoff Reduction) practices located at the following address,_____, as permitted under Building Permit #_____, have been constructed in conformance with the approved plans and specifications.

Professional

Seal

_____
Signature

_____
Date

CITY OF ATLANTA
DEPARTMENT OF WATERSHED MANAGEMENT
STORMWATER AS BUILT SURVEY REQUIREMENTS

From Section 74-519 (b) of the City of Atlanta Code of Ordinances, *"Upon completion of a project, and prior to final inspection pursuant to section 74-43(f) or issuance of a certificate of occupancy, the applicant or responsible party…is required to submit an electronic format as determined by the department of watershed management, and a paper format of the actual "as built" plans for any stormwater management facilities or practices after final construction is completed. The plan must show the as built configuration for all stormwater management facilities and practices and must be certified by a professional engineer."*

A paper copy of this survey and attached "Engineer's Certificate" will be given to the Environmental Compliance Inspector of the given site, and an electronic copy (.pdf) of each will be emailed to crayburn@atlantaga.gov.

It shall be at all times the responsibility of the engineer of record to accurately model and report the conditions on the site, AFTER CONSTRUCTION. All labeling shall be consistent with the approved hydrology study and maintenance agreement.

All as built drawings must be georeferenced to the US State Plane coordinate system, NAD 83, GA West Zone, US Survey Feet. All drawings must contain two reference pins (i.e. property corners).

The following items must be shown on the survey:

1. Seal and signature of engineer of record (in addition to surveyor's seal and signature if applicable);
2. Place the following statement on the survey, "The City of Atlanta accepts no responsibility for errors or omissions from this survey."
3. Location, diameter, pipe material, and invert elevations (up- and downstream) of all stormwater conveyance pipes;
4. Label accordingly the location of all catch basins, inlets, headwalls, swales, drainage easements, junction boxes, and manholes;
5. For each Green Infrastructure (or Water Quality) practice, provide the location, detailed description, volume (ponding, engineered soils, aggregate, etc.), cross-sectional diagram, and a detail of the outlet control and/or bypass/diversion structures.
6. The location and name of each stormwater detention facilities (dry extended detention pond, wet pond, underground vault, underground oversized pipes, etc.) For each stormwater detention facility on the developed property, provide:
   a. Location of the facility in respect to property lines, public roads R/W, and other easements;
   b. Maintenance access easements;
   c. Dimensions of facility (pond, vault, oversized pipes, etc.);
   d. Two foot elevation contours and pertinent spot elevations;
   e. Both the elevation at the bottom of the facility in front of the outlet control structure and the opposite end of the facility to verify positive drainage;
   f. Width of dam at the top of dam (if applicable);
   g. Location, cross-sectional diagram, and dimensions of auxiliary/emergency spillway (if applicable);
   h. Freeboard above the 100 year water surface elevation;
   i. Delineate maximum ponding elevation and limits of ponding; and
   j. Show a detail of the outlet control structure, including:
      i. the following elevations (if applicable)- top of outlet control structure or wall, permanent pool, 100 yr overflow weir/spillway, channel protection orifice/weir, channel protection volume, water quality orifice (for wet pond), water quality volume, 25 year water surface, 100 year water surface, outlet control pipe invert elevation at structure, outlet control pipe invert elevation at downstream headwall, and ALL inlet headwall elevation(s) in the pond;
      ii. the following dimensions – shape and size of outlet control structure, wall, dam, detention weir/orifice size, channel protection orifice size, water quality orifice size, and outlet pipe;
      iii. the maximum height of water above inverts for each of these conditions – water quality, channel protection, and the 2, 5, 10, 25, 50, & 100 yr storm event detention (if applicable);
      iv. the volumes for water quality, channel protection, 2, 5, 10, 25, 50 & 100 yr storm event detention, and wet pond storage (if applicable);
      v. outlet pipe discharge velocity, V_{25}, and dimensions, depth, and average rock size of outlet protection (St); and
      vi. a detail of the trash rack.

RUNOFF REDUCTION ALTERNATIVE DESIGN

DEPARTMENT OF WATERSHED MANAGEMENT
CITY OF ATLANTA

Site Name _____ Date (Received)_____

Address _____ BB or LD # (if assigned)_____

Section 74-513 (b) of the Post-Development Stormwater Management Ordinance states that "*If any of the stormwater runoff volume generated by the first 1.0" of rainfall cannot be reduced or retained on the development site, due to site characteristics or constraints…the remaining volume shall be increased by a multiplier of 1.2 and shall be intercepted and treated in one or more stormwater management practices that provide at least an 80 percent reduction in total suspended solids."*

If reducing the entire 1.0" volume onsite is not feasible, the Design Professional must provide the following documentation:

1) Soil investigation report (which includes double-ring infiltrometer or percolation tests) demonstrating that onsite soils are not suitable for infiltrating the required volume within a 48-hour time period. The test locations must be in the region where stormwater management practices would be utilized at the appropriate depths. Evidence of a high water table, surface bedrock, contaminated soils, or the presence of a High Risk Operation or Hotspot (as defined in Section 74-503) may be included in this report.

2) A written analysis signed and sealed by the Design Professional stating the amount of volume that cannot be reduced onsite, the total volume of Water Quality to be provided instead (1.2 multiplier), and site specific reasoning and supportive evidence for not providing the runoff reduction volume. This analysis must demonstrate that incorporating runoff reduction practices to comply with the ordinance is an extreme economic hardship or physical impossibility due to the configuration of the site or to irreconcilable conflicts with other City requirements. Certain practices, such as green roofs and rainwater harvesting techniques, do not require infiltration into subsurface soils, but rather rely on evapotranspiration and reuse. An estimated cost comparison of said runoff reduction practices compared to the proposed Water Quality practices must be included to demonstrate an economic hardship.

3) A conceptual site plan in accordance with Section 74-510 of the ordinance.

The above documentation must be submitted with this form during the Stormwater Concept Plan consultation meeting or during permit review. If development plans change significantly between the consultation meeting and permit review, an updated justification will be required. Site Development plan review staff will decide whether the submitted justification warrants approval. This decision may be appealed in writing to Lowell Chambers, Director of Site Development, or to Margaret Tanner, Deputy Commissioner of the Office of Watershed Protection. Decision of said appeal shall be made within one week of receiving the attached form and documentation.

Design Professional_____ Signature _____

FOR ADMINISTRATIVE USE ONLY

☐ Approved

☐ Approved w/ the following conditions _____

_____

☐ Denied _____

_____

Reviewed by: _____ _____
(Print Name) (Signature) (Date)

Stormwater Management Facility
Inspection and Maintenance/ Indemnification Agreement

WHEREAS, _____ (the "Owner") is or prior to permitting of the improvements will be the owner of the real property described on Exhibit "A", attached hereto and made a part hereof by reference, containing approximately _____ acres and located in the City of Atlanta (the "City") at_____ in Land Lot _____ of the _____ District, _____ County, Georgia (the "Property"); and

WHEREAS, the Owner desires to make certain improvements to the property and obtain a building permit from the City for such improvements; and

WHEREAS, the improvements the Owner desires to make to the property include a storm water management facility consisting of _____, further described on Exhibit "B", attached hereto and made a part hereof by reference; and

WHEREAS, ongoing inspection and maintenance of the stormwater management facility is necessary to ensure its continued function as designed and constructed or preserved, an Operations and Maintenance Plan is required, described on Exhibit "C", attached hereto and made a part hereof by reference; and

WHEREAS, the City requires the execution of a Stormwater Management Inspection and Maintenance Agreement in accordance with City Code Section 74-511 prior to and as a condition of receiving a permit for the improvements included on the plans prepared by _____ and dated _____, said plans incorporated by reference into this Agreement, as maintained in the records of the City.

THEREFORE, in order for the City to issue a building permit to the Owner, the Owner agrees for him/her self(s), his/her agents, his /her assigns and successors in title to the property, to the following:

1) To indemnify the City of Atlanta, its officers, agents, and employees, successors and assigns from any damages or claims for damages arising out of a) the construction or use of the stormwater management facility as shown on the above referenced plans, b) the additional runoff or discharge of storm water from the property caused by the improvements to the property, or c) any up-stream or down-stream adverse impacts due to structural, design, installation, maintenance or any other failure of the stormwater facility.

2) To file and record the executed agreement and all the exhibits in the Fulton or DeKalb County Courthouse. The agreement is a permanent covenant running with the land and shall be binding upon the successors in title of the Owner.

3) To own, operate, and maintain the stormwater facility in good order and repair, as designed and permitted and not to encroach upon, diminish, or alter the stormwater management facility without first obtaining an appropriate building permit from the City for any subsequent modifications.
4) To provide an annual inspection and maintenance report to the City to ensure continuing

proper performance of the stormwater management facility as designed. The inspection and the report will be performed and attested to by a qualified professional having certified Level II Georgia Soil and Water Conservation Commission Specialist standing and shall conform to the format shown in Appendix E of the Georgia Stormwater Management Manual. Any deficiencies noted in either operation or maintenance of the facility(s) must be included in the report along with the proposed remedies required and a time table for their implementation. If portions of the property are subsequently sold or otherwise transferred to new ownership, legally binding arrangements must be made to pass the inspection and maintenance responsibility to the appropriate successors in title. These arrangements must designate for each portion of the site the party to be responsible for its inspection and maintenance. A copy of the report must be submitted to the City of Atlanta, Department or Watershed Management and will be due annually on the date specified by the Department.

The Owner, in conjunction with this Agreement and in accordance with Section 74-517 of the City Code, acknowledges that the City may enter the Property at reasonable times and in a reasonable manner for the purpose of inspection. The Owner further acknowledges that that if the Owner fails or refuses to meet the requirements of this agreement, the City may, after appropriate notice, enter the property to correct a violation of the design standards or maintenance requirements by performing the necessary work to place the facility in proper working condition. When the City must perform such repairs or improvements, all costs for work associated with bringing the stormwater management facility back to good order and repair shall be at the Owner's sole cost and expense.

The rights and obligations granted herein shall run with the land and shall be binding upon the Owner, its successors and assigns.

IN WITNESS WHEREOF, the Owner has caused this Stormwater Management Facility Inspection and Maintenance/ Indemnification Agreement to be duly executed under seal, this_____day of_____, 2_____

OWNER

_____
Unofficial Witness

By: _____

_____
(Print)

_____
Notary Public
My commission expires:

Its: _____
(Title of authorized representative)

Notary Seal
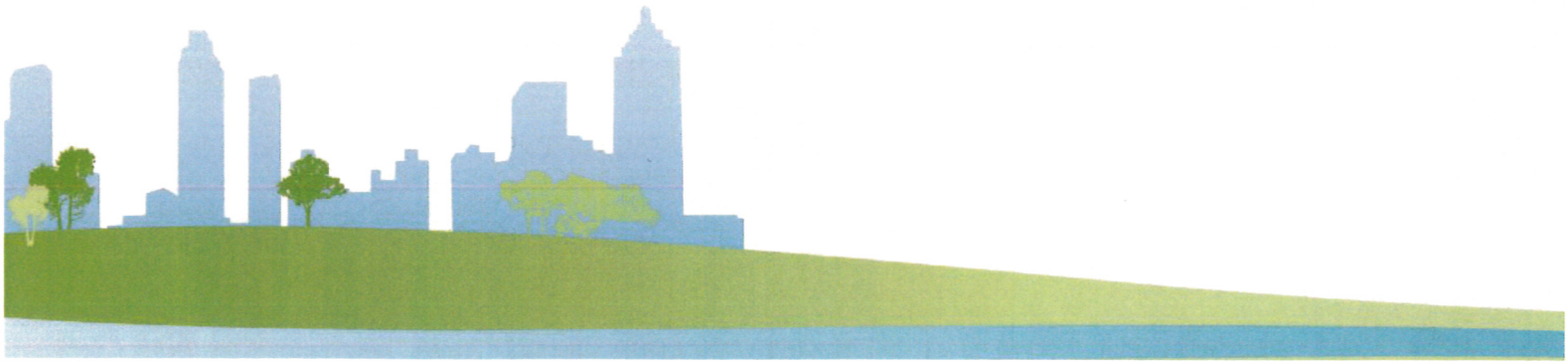
(Corporate Seal)